Postprint of: Mikielewicz J., Mikielewicz D., Gumkowski S., A model of liquid film breakdown formed due to impingement of a two-phase jet on a horizontal surface, International Journal of Heat and Mass Transfer, Vol. 53, Iss. 23–24 (2010), pp. 5456-5464,
DOI: 10.1016/j.ijheatmasstransfer.2010.07.012
© 2010. This manuscript version is made available under the CC-BY-NC-ND 4.0 license https://creativecommons.org/licenses/by-nc-nd/4.0/

Manuscript submitted for consideration to publish in International Journal of Heat and Mass Transfer

A MODEL OF LIQUID FILM BREAKDOWN FORMED DUE TO IMPINGEMENT OF A TWO-PHASE JET ON A HORIZONTAL SURFACE

J. Mikielewicz[1], *D. Mikielewicz*[2], *S. Gumkowski*[2,3]

[1] The Szewalski Institute of Fluid-Flow Machinery PASci, Gdansk, POLAND
[2] Faculty of Mechanical Engineering, Gdansk University of Technology, Gdansk, POLAND
[3] University of Warmia and Mazury, Faculty of Technical Sciences, Department of Electric and Power Engineering, Olsztyn, POLAND

ABSTRACT

The present work aims to provide an explanation to the phenomenon of breakdown of the thin liquid film created by impinging two-phase, liquid-gas jet. Existing in literature models describe merely the breakdown of single phase liquid films. The model presented here is based on examination of mass and energy equations under the applied criterion of the minimum of total energy. That allows to determine the minimum thickness of isothermal, thin liquid film created by impinging two-phase jet on a solid surface. The mechanical energy of the system consists of kinetic energy of liquid film and surface energy of all physical surfaces consisting for the control surface. An analytical expression for the minimum thickness of such liquid film is derived. The liquid film thickness at the breakdown is a function of the contact angle and shear stresses on the liquid-gas interface. Some comparisons with the experimental data are shown exhibiting a good performance of the postulated model.

Keywords: two-phase jet, liquid film breakdown, stability criterion

1. INTRODUCTION

The flow of isothermal, thin liquid films is encountered in many industrial applications.

Examples include films flowing down vertical and inclined surfaces in distillation industry, wetted columns, cooling towers, etc. Applications can also be found in films created by impinging jets in energy conversion systems such as heat exchangers, cooling systems in metallurgy and cooling of nuclear fuel elements following a loss of coolant accidents. Important consequences can be found in devices where critical heat flux at low quantities is encountered or in film cooling of hot surfaces, such as turbine blades. It is known that there is a minimum film thickness depending on the surface shear stress, wall heat flux, contact angle and physical properties at which the continuous film becomes unstable, forming rivulets separated by dry areas. On vertical wall these rivulets are approximately straight and vertical, although periodic sideways motions are frequently observed. The conditions under which a thin liquid film flowing down surface breaks up into a series of stable rivulets is a challenging task to be specified. The actual mechanism of the breakdown is quite complex and is still poorly understood. Several theoretical and experimental investigations have been reported, however, these regarded mainly the flow down the vertical wall. None of the reports concern the cause of breakdown of the thin liquid film created by impinging two-phase liquid-gas jet driven mainly by inertia forces.

One way to approach the formation of dry spots on the wall is via a stability method which imposes a small disturbance on the laminar steady primary flow of a liquid film. However, such kind of analysis can merely state the conditions, at which the disturbances on the phase separation surface are stable and it has little to do with the problem of the film breakdown. Such situation stems from two reasons. First, the surface disturbances, which would induce the breakdown of the liquid film apart must be of the order of the film thickness, whereas that does not permit the use of the theory of small perturbations. Secondly, such kind of analysis does not include the wall influence on the process of breakdown (the contact angle at the

MOST WIEDZY Downloaded from mostwiedzy.pl

border of three phases), which, according to experimental evidence, is very important. Following the cross elimination of the linearised equations of motion and continuity one obtains the Orr-Somerfeld equation and four homogeneous boundary conditions. Such eigenvalue problem is then solved for the complex wave speed in the function of Reynolds number, Weber number and dimensionless wave number. The works on that topic include for example that due to Fukano et al. (1985).

Another way to approach the problem is through the analysis of the rivulet stability which are formed as a result of the film breakdown. Such kind of analysis can be regarded as an analysis of the final stage of the breakdown process or the first stage of the reverse process, namely the flooding. The criteria used in such kind of approaches are different. They range from the force balance criteria at the stagnation point to the criteria of minimum energy or even minimum power. Such analysis, however, still does not provide a full description of the problem. The concept of stability analysis originated with the works by Hartley and Murgatroyd (1964) who suggested that a stable film configuration corresponds to a minimum mechanical energy, where it consists of kinetic and surface energy. That approach suffered due to a fact that it did not consider the contact angle. Hobler (1964) considered the kinetic and surface energy contained in a broken film with account of the contact angle. Hobler concluded that in the case when the total energy of such configuration exhibits minimum then the film would break otherwise the film would be stable. Bankoff (1971) suggested a model in which the continuous liquid would break up into rivulets in the shape of segments of the circle, which were adjacent to each other so that no dry patches between the rivulets were present. That was a major disadvantage of that model. Bankoff derived the condition for the breakdown of continuous film into rivulets basing on the equality between flow rates and total energy before the film rupture and after. Mikielewicz and Moszynski (1978) extended further the Bankoff's

MOST WIEDZY Downloaded from mostwiedzy.pl

model to incorporate the dry patches between the rivulets. A new parameter has been introduced to model the amount of the wetted area. That parameter was defined as a ratio of the area occupied by rivulets to the total surface area. Additionally to the assumptions of equality of mass flow rates and total energy before and after the film breakdown the assumption of the minimum of energy was introduced. The results obtained with that model were in some cases under predicting the experimental data, however, the breakdown was envisaged by the model. In some cases overshooting of the film thickness was predicted. Ihnatowicz et al. (1979) included the interfacial shear stress and heat flux into the model by implementation of the blowing parameter. Chung and Bankoff (1980) incorporated the heat flux and interfacial shear stress in a different fashion and obtained results which agreed with their experimental results for higher contact angles, from the range of 80 to 100°. Such approach at high contact angles was justified by the argument based on capillary dryout as well as adsorption energies to support the statement that such conditions can be present under strong heating conditions. The problem of heat transfer in rivulets has also been studied by Rageb and Mikielewicz (1995). El-Genk et al. (2001), (2002) obtained the kinetic energy using approximate expression of two-dimensional velocity distribution in the rivulet using the Ritz method.

The third approach is based on consideration of the force balance in the film. In such case the thermocapillary contributions may by of importance which are usually not taken into account in the rivulet model. Bankoff and Tung (1982) tried to combine the perturbation based approach with the modified rivulet model accounting for thermocapillary effects and contact angles. New patterns of Marangoni effects were found by Zhang et al. (2007).

MOST WIEDZY Downloaded from mostwiedzy.pl

The present work aims to provide an explanation to the phenomenon of breakdown of the thin liquid film created by impinging two-phase liquid-gas jet driven by inertia forces. The model is derived on the basis of application of the criterion of the minimum of total energy with the view to determine the minimum thickness of isothermal, thin liquid film created by impinging two-phase jet on a solid surface. An analytical expression for the minimum thickness of such liquid film is derived. The total energy is the sum of kinetic energy and surface energy of all interface surfaces. The liquid film thickness at the breakdown is a function of the contact angle and shear stresses on the solid-liquid and liquid-gas interfaces.

2. ANALYSIS

Considered is a homogeneous liquid film of thickness, h, spreading radially out on the solid surface due to inertia forces. The film is formed as a result of impinging of a two-phase jet of water and air, as shown in Fig. 1-3. The resulting flow of the liquid film is regarded as fully developed and laminar. Mechanical energy of the system consists of kinetic energy of liquid film and surface energy of all physical surfaces constituting the control surface. The total mechanical energy of a film system before the breakdown, see Fig. 1a, with respect to the film width, is:

$$e_f = \frac{E_f}{\lambda} = \frac{\rho_l}{2}\int_0^h w_f^2(y)dy + \sigma_{lv} + \sigma_{sv} \tag{1}$$

The corresponding mass flow rate of the film prior to the breakdown is:

$$\frac{\dot{m}_f}{\lambda} = \rho_l \int_0^h w_f(y)dy \tag{2}$$

MOST WIEDZY Downloaded from mostwiedzy.pl

Subsequently lets consider the system after the breakdown into rivulets (Fig. 1b). For the sake of simplicity lets assume that the rivulets formed due to the film breakdown have a shape of the circle segments (parts of tubes). Another assumption made is that the surface tension σ, density of liquid ρ and volumetric flow rate of radially moving film are constant. On the contact surface between liquid and solid there is assumed a contact angle θ_0. For further simplifications we assume velocity profile in the rivulet same as in the constant thickness film, h_r. The mass flow rate in the rivulet per unit width of the film is:

$$\frac{\dot{m}_r}{\lambda} = \frac{\rho_l}{\lambda} \int_0^{h_r(\xi)} \int_0^{x_1} w_r\left(y, h_r(\xi)\right) dy d\xi \tag{3}$$

The total mechanical energy following the breakdown into rivulets assumes a form:

$$e_r = \frac{E_r}{\lambda} = \frac{\rho_l}{2} \int_0^{h_r} \int_0^{x_1} w_r^2\left(y, h(\xi)\right) dy d\xi + \frac{1}{\lambda}(2R\theta_0 + \cos\theta_0 - R\sin 2\theta_0)\sigma_{lv} + \sigma_{sv} \tag{4}$$

On the film edge there holds a relation

$$\sigma_{sv} = \sigma_{sl} + \sigma_{vl}\cos\theta_0 \tag{5}$$

Substituting (5) into (4) we arrive at the expression for the rivulet total mechanical energy in the form:

MOST WIEDZY Downloaded from mostwiedzy.pl

$$e_r = \frac{E_r}{\lambda} = \frac{\rho_l}{2\lambda}\int_0^{h_r}\int_0^{x_1} w_r\left(y, h(\xi)\right)^2 dy d\xi + x(\theta_0 / \sin\theta_0 - \cos\theta_0)\sigma_{lv} + \cos\theta_0\sigma_{lv} + \sigma_{sv} \qquad (6)$$

In (6) the surface wetting parameter, x, has been introduced determined as a ratio of wetted surface to the total surface area, i.e.:

$$x = \frac{2x_1}{\lambda} = \frac{2R\sin\theta_0}{\lambda} \qquad (7)$$

Examination of equation (6) therefore shows that the total energy of the ruptured film, e_r, is a function of the parameter x.

Let's formulate now the conditions of the film breakdown into rivulets [1-4]. Let's assume that during the breakdown the mass flow rate of the flow as well as mechanical energy per unit width of the film remain the same and the appearing rivulets are stable and obey the criterion of minimum of energy. Such conditions can be formulated in the form:

$$\frac{\dot{m}_f}{2\pi r} = \frac{\dot{m}_r}{2\pi r} \qquad (8a)$$

$$e_f = e_r \qquad (8b)$$

$$\frac{\partial e_r}{\partial x} = 0 \quad and \quad \frac{\partial^2 e_r}{\partial x^2} > 0 \qquad (8c)$$

The above conditions will be applied to the film formed during the impingement of a two-phase liquid-gas jet on a solid surface. Bearing that in mind we will approach the mass and momentum conservation equations for the case of a film moving under the influence of inertia forces. The conservation of mass equation in the film yields:

MOST WIEDZY Downloaded from mostwiedzy.pl

$$\frac{\partial(rw)}{\partial r} = 0 \tag{9}$$

In order to solve equation (9) we assume a linear velocity profile as a first approximation:

$$w = v_d \frac{y}{r} \tag{10}$$

Obtained velocity profile obeys the condition that at the solid surface, for z=0, velocity equals zero, i.e. w=0. Solution of the mass conservation equation (9) reads:

$$v_d = \frac{4Q}{\pi d_d^2} \tag{11}$$

Now, let assume a simplified form of momentum equation for the film moved by inertia forces:

$$w\frac{dw}{dr} = \nu \frac{d^2 w}{dy^2} \tag{12}$$

When velocity profile (10) is introduced into (12) we obtain a more refined velocity profile:

$$w(y) = \frac{v_d^2}{3r^3\nu}\left(h_f^3 y - \frac{y^4}{4}\right) + \frac{\tau}{\mu} \tag{13}$$

The velocity profile (13) can be reduced to the non-dimensional form :

MOST WIEDZY Downloaded from mostwiedzy.pl

$$\frac{w}{w_0} = (3T+1)y^+ - \frac{\left(y^+\right)^4}{4} \tag{14}$$

where:

$$w_0 = \frac{v_d^2 h_f^4}{3r^3\nu}, \qquad T = \frac{\tau r^3}{\rho\, w_0^2 h_f^3}, \qquad y^+ = \frac{y}{h_f}$$

The obtained velocity profile, similarly as the profile resulting from (12), obeys the condition of zero velocity at the wall as well as the mass conservation equation.

Introducing such a velocity profile into relations (8) we obtain a set of three algebraic equations with three unknowns S, R, x. Solving that system of equations we obtain the relation for the film thickness before the breakdown in a non-dimensional form S, a non-dimensional rivulet radius, R, and a share of wetted surface, x.

Introducing the velocity profile (14) into the first condition (8) we obtain a relation:

$$\frac{2}{3}\frac{\sin\theta_0}{x}\left(\frac{9}{20}+\frac{3}{2}T\right)\left(\frac{R}{h_f}\right) = \left(\frac{R}{h_f}\right)^3 TJ_2(\theta_0) + \frac{3}{10}J_5(\theta_0) \tag{15}$$

where

$$J_2(\theta_0) = \int_0^{\theta_0} (\cos\theta - \cos\theta_0)^2 \cos\theta d\theta$$

$$J_5(\theta_0) = \int_0^{\theta_0} (\cos\theta - \cos\theta_0)^5 \cos\theta d\theta$$

MOST WIEDZY Downloaded from mostwiedzy.pl

The total mechanical energy of the film before the breakdown, related to the unit of the film width, in the considered case is:

$$e_f = \frac{E_f}{\lambda} = \rho w_0^2 h_f \left[\frac{(1+3T)^2}{3} - \frac{1+3T}{12} + \frac{1}{144} \right] + \sigma_{lv} + \sigma_{ls} \tag{16}$$

whereas energy of rivulets is:

$$e_r = \rho w_0^2 h_f \left[\frac{R}{\lambda} \left[3T^2 \left(\frac{R}{h_f} \right)^3 J_7(\theta_0) + \frac{7}{4} T \left(\frac{R}{h_f} \right)^6 J_8(\theta_0) + \frac{49}{144} \left(\frac{R}{h_f} \right)^9 J_9(\theta_0) \right] \right] + \sigma_{lv} \frac{1}{\lambda} \left(2R\theta_0 + \lambda \cos\theta_0 + R \sin 2\theta_0 \right) + \sigma_{sl} \tag{17}$$

Introducing relation (7) into (17) we obtain:

$$e_r = \rho w_0^2 h_f \left[\frac{x}{2\sin\theta_0} \left[3T^2 \left(\frac{R}{h_f} \right)^3 J_7(\theta_0) + \frac{7}{4} T \left(\frac{R}{h_f} \right)^6 J_8(\theta_0) + \frac{49}{144} \left(\frac{R}{h_f} \right)^9 J_9(\theta_0) \right] \right] + \left(x \frac{\theta_0}{\sin\theta_0} + \cos\theta_0 - x\cos\theta_0 \right) \sigma_{lv} + \sigma_{sl} \tag{18}$$

where:

$$J_7(\theta_0) = \int_0^{\theta_0} (\cos\theta - \cos\theta_0)^7 \cos\theta d\theta$$

$$J_8(\theta_0) = \int_0^{\theta_0} (\cos\theta - \cos\theta_0)^8 \cos\theta d\theta$$

$$J_9(\theta_0) = \int_0^{\theta_0} (\cos\theta - \cos\theta_0)^9 \cos\theta d\theta$$

MOST WIEDZY Downloaded from mostwiedzy.pl

Next, comparing relations (16) and (18), in line with the second condition of relation (8) we arrive at the relation:

$$\frac{(1+3T)^2 S}{3} - \frac{(1+3T)S}{12} + \frac{S}{144} - \frac{xS}{2\sin\theta_0} \times$$
$$\left[3T^2\left(\frac{R}{h_f}\right)^3 J_7(\theta_0) + \frac{7}{4}T\left(\frac{R}{h_f}\right)^6 J_8(\theta_0) + \frac{49}{144}\left(\frac{R}{h_f}\right)^9 J_9(\theta_0)\right] = \tag{19}$$
$$x\left(\frac{\theta_0}{\sin\theta_0} - \cos\theta_0\right) + \cos\theta_0 - 1$$

where:

$$S = \frac{\rho\, w_0^2 h_f}{\sigma_{lv}}$$

It stems from the condition (15) that the share of the wetted surface is a function of a ratio of the rivulet radius and film thickness, $x = x(R/h_f)$. The condition of minimum of energy, expressed as a third condition in (8), following introduction of x, determined in relation (15), rearranges that condition to the form:

$$\frac{de_r}{d\left(\frac{R}{h_f}\right)} = 0 \tag{20}$$

From relation (20) an optimal ratio R/h can be determined which corresponds to the minimum of rivulet energy. Subsequently, knowing R/h, from relation (15) the share of the wetted surface x can be found. Finally, having the knowledge about R/h and x the non-dimensional film thickness S can be determined. Therefore, the three parameters in the problem are:

MOST WIEDZY Downloaded from mostwiedzy.pl

contact angle, non-dimensional shear stresses on the liquid and gas interface and non-dimensional thickness of the film before breakdown, S.

Subsequently, the radius of the rivulets R can be determined from the knowledge of the ratio R/h, which subsequently enables determination of the distance between the rivulets λ from the definition of the wetted surface area, x. Having the distance between the rivulets we can determine the number of rivulets from the relation:

$$n = \frac{2\pi r}{\lambda} \tag{21}$$

There is still an outstanding issue of determination of the radius r on which the breakdown into rivulets takes place. That requires assumption of a model enabling determination of the radial change of the film thickness

$$h_f = h_f(r) \tag{22}$$

Some simple models enabling calculation of that problem have been presented in Mikielewicz (2004). The simplest of all is assumptions is a constant film thickness

$$h_f = \frac{d}{4} \tag{23}$$

Sample calculations showing the relation between the non-dimensional radius and contact angle are in shown in Fig. 4-6 for T=10.

MOST WIEDZY Downloaded from mostwiedzy.pl

3. EXPERIMENTAL FACILITY

The theoretical model of breakdown of the liquid layer has been validated by experimental investigations. The details of the experimental arrangements can be found in Gumkowski (2005) and here only a brief outline of it will be presented.

Experimental rig, shown schematically in Fig. 7, consists of a closed water loop consisting of: water tank, water pump, water flow-meter, gauze filter, control valve, nozzle and flexible hoses. The plates on which the jet impinges, were made of brass, aluminum or organic glass. During experiments the impinging jet has been directed to the centre of the plate, but the arrangement allowed for jet impingement at an arbitrary point of the plate and at arbitrary angle. The diameter of the hydraulic jump has been measured by means of a projected shadow of a measuring grid on the plate, where the hydraulic jump was formed. The method enables a non-invasive measurement of the parameter of the hydraulic jump. The border between the area of a very thin film before and a much thicker film after the hydraulic jump, was very sharp and oscillating. The oscillations of the border were equal to about one millimeter whereas the corresponding oscillation of the diameter of the hydraulic jump could be estimated at the level of about 2-3mm. Oscillations of the border between thin and thick liquid layers were caused by intensive wave motion of surfaces of the thin as well as thick water layer. The measuring apparatus ensured the stability of mass flow rates as well as its precise regulation. The investigations were carried out in the following range of parameters:- mass flow rate of water impinging jet, $\dot{m}=2\div7$[kg/h], nozzle-to-plate distance, H=0.1 and 0.06m.

MOST WIEDZY Downloaded from mostwiedzy.pl

4. EXPERIMENTAL INVESTIGATIONS

In the course of experiments it was concluded that there is a relation between the parameters of liquid layers, at which the loss of stability occurs, and parameters of air layers flowing above respective liquid layer. The liquid film motion results from interactions between the inertia forces and shear stresses on the interface. The liquid flow is characterized by the Reynolds number of liquid in a two-phase mixture, defined on the basis of nozzle diameter, $Re_l=4\dot{V}_l/(\pi d_2 \nu_l)$, whereas the gas flow is by the Reynolds number, but in this case the characteristic dimension is a wetted perimeter $\pi(d_3+d_4)$ of the annulus nozzle presented schematically in fig. 8. Hence, $Re_g=4\dot{V}_g/(\pi(d_3+d_4)\nu_g)$. It can therefore be said that in the course of investigations it has been assumed that there is a relation between the Reynolds number of the liquid undergoing the breakdown and the Reynolds number of air present in the impinging two-phase jet. Examples of such relations are presented in Fig. 9 and 10. In the present research different surfaces were examined, namely brass, aluminum and organic glass in order to present data for different wetting angles of respective surfaces. According to the theory presented above the wetting angle is one of the most responsible parameters for controlling the phenomenon of liquid film breakdown, however in literature there are no engineering correlations for that term. Such correlation would indeed enhance the possibility of using the present model of liquid film breakdown in engineering calculations. The results for metals, however, i.e. aluminum and brass are different than for the case of glass, where the wetting angle appears to be rather significantly different.

The surface of the metal plate (brass, glass or aluminum) on which the aerosol impinged was carefully polished before every measurement. The maximum surface roughness was smaller than 1 micron. The phenomenon of liquid layer loss of stability occurs inside the area of

MOST WIEDZY Downloaded from mostwiedzy.pl

diameter smaller than that corresponding to the occurrence of hydraulic jump. On the diameter greater than that of the hydraulic jump the liquid layer is always stable and the film breakdown does not occur. Investigations into the liquid film stability were carried out in such a way that for a specified steady-state flow of air the flow rate of water was adjusted in such a way that the amount of water separated from the aerosol was continuous and exhibited a hydraulic jump. Next, preserving the constant flow rate of air the flow of water in aerosol was reduced, which permitted to observe the desired phenomenon on the liquid layer. The reduction of the liquid flow rate was gradual and was taken in steps equal to about 2 to 4% of the previous flow rate of liquid, which was thought of as that at which the loss of stability would occur. Characteristic to the surface of liquid prior to the loss of stability was the intense waving of the liquid layer and appearance of small dry patches on the plate surface. These were, however, immediately re-wetted. Subsequent reduction of water flow rate rendered usually the breakup in a few locations. Then, in most of the cases the flow of liquid developed into the rivulets. The phenomenon was observed with a bare eye and the photographs were taken of relevant cases. The investigations of the film breakup were carried out for air Reynolds numbers from the range 35 000 to 90 000, whereas the liquid Reynolds number ranged from 315 to 3 500. The range of air Reynolds numbers stemmed from the potential technical applications. The liquid Reynolds numbers were a resulting value corresponding the liquid film breakup. Examples of the water flow on a brass plate just after the breakdown and immediately after the re-wetting are shown in fig. 11 and 12. In the case shown in the figure 11 the number of rivulets following the liquid film breakup was about 105 and the diameter corresponding to the breakup was about 18 cm. Calculations accomplished using the presented earlier model for appropriate contact angle led to similar results. Of crucial importance is finding an appropriate value of contact angle relevant to a given surface. Its change by even 1° leads to significant changes of the number of rivulets. In table 1 presented

MOST WIEDZY Downloaded from mostwiedzy.pl

are results a number of rivulets, their width and distance between rivulets for water spreading on different surfaces. Most of rivulets were of the width of about 1÷2mm and the distance between rivulets was about 2÷5mm. All presented data for different impingement surfaces are tabulated in Table 1.

5. CONCLUSIONS

In the paper presented have been considerations of the breakdown of a thin liquid film into rivulets. The film was created by impinging two-phase jet. The theoretical model developed in the course of the research is based on examination of the balances of mass and energy as well as the minimum total energy criterion with the view to determine the minimum thickness of an isothermal, thin liquid film created by impinging two-phase jet on a solid surface. An analytical expression for the thickness of such liquid film was derived. The considered total energy is the sum of kinetic energy and surface energy of all interface surfaces. The liquid film minimum thickness at the breakdown is mainly a function of the contact angle and shear stresses on the solid-liquid and liquid-gas interfaces.

Assumed velocity profile in the liquid film (13) describes a laminar flow driven by merely the inertia forces and friction forces on the film surface. In the experiments observed has been the film breakdown during impingement of a two-phase water – air jet. In such a case the motion of the film was rendered by inertia forces as well as shear stresses on liquid-gas interface. A fairly good agreement between estimation of calculated and measured values of a number of formed rivulets has been obtained.

MOST WIEDZY Downloaded from mostwiedzy.pl

It can be seen from presented results that breakdown and re-wetting strongly depend on the properties of plate material, namely the contact angle. The wetting angle was not measured and only estimated and it can be concluded that the contact angle for metals is markedly different from that for glass. Knowledge of appropriate model for calculation of real contact angles would generalize application of the presented theoretical model.

ACKNOWLEDGMENTS

The experimental work presented in the paper was funded by the Ministry for Science and Higher Education research project R06 011 03.in years 2008-2010.

NOMENCLATURE

D	–	diameter, (m)
E	-	energy, (J)
$\dot{m}$	-	mass flowrate, (kg/s)
R	-	radius, (m)
h	-	thickness, (m)
n	-	number of rivulets, (-)
u	-	velocity, (m/s)
$\dot{v}$	-	volumetric mass flow rate, (m^3/s)
x	-	wetting parametr, (-)
λ	–	distance between the rivulets, (m)
ν	–	kinematic viscosity, (m^2/s)
σ	–	surface tension, (N/m)
θ	–	contact angle, (deg)

Subscripts

f	–	Fluid
g	–	Gas
l	–	Liquid
r	-	Rivulet
w		Wall

REFERENCES

1. Bankoff S.G., Stability of liquid flow down a heated inclined plane, Int. J. Heat Mass Transfer, vol. 14, 377-385, 1971.
2. Bankoff S.G., Tung H., Rivulet formation on a heated wall, Proc. Int. Heat Transfer

MOST WIEDZY Downloaded from mostwiedzy.pl

Conference, Munich, 1972, 363-367, 1982.
3. Bentwich D., Glasser D., Kern J., Williams D., Analysis of rectilinear rivulet flow, AIChE Journal, 22, 772-779, 1976.
4. Chung J.C., Bankoff S.G., Initial breakdown of a heated liquid film in concurrent two-component annular flow: rivulet and drypatch models, Chem. Eng. Commun., 4, 45-470, 1980.
5. El-Genk M.S., Saber H.H., Minimum thickness of a flowing down liquid film on a vertical surface, Int. Journal of Heat and Mass Transfer 44, 2809-2825, 2001.
6. El-Genk M.S., Saber H.H., An investigation of break of an evaporating liquid film, falling down a vertical, uniformly heated wall, Journal of Heat Transfer, vol. 124, 39-50, 2002.
7. Fukano T., Itoh A., Ousaka A., Breakdown of a liquid film flowing concurrently with gas in horizontal flow, Physical Chemical Hydrodynamics, 6, 23-47, 1985.
8. Gumkowski S., Experimental investigations of stability of thin liquid films formed on a flat surface due to impingement of aerosol jet, Chemical and Process Engineering, 26, 173-181, 2005, (in Polish).
9. Hartley D.E., Murgatroyd W., Criteria for break up of thin liquid layers flowing isothermally over solid surface, Int. J. Heat and Mass Transfer, vol. 9, 1003-1015, 1964.
10. Ihnatowicz E., Gumkowski S., Mikielewicz J., J. Heat Transfer, 101, 712, 1979.
11. Manev E.D., Angarska J.,K., Critical thickness of thin liquid films: comparison of theory and experiment, Colloids and Surfaces A, 263, 250-
12. 257, 2005.
13. Mikielewicz J., Moszyński J.R., Minimum Thickness of a Liquid Film Flowing Vertically Down a Solid Surface, Int. J. Heat Mass Transfer, Vol. 19, pp. 771-776, 1976.
14. Mikielewicz J., Moszyński J.R., Breakdown of Shear Driven Liquid Film, Transactions of IFFM, No. 66, 3-11, 1975.
15. Mikielewicz J., - Breakdown of thin liquid film sinto rivulets and solid surfach wetting problem, Scientific Notes of Agricultural and Technical Academy in Olsztyn, Mechanika i budownictwo, No. 5, 255-276, 1978 (in Polish).
16. Rageb A.M., Mikielewicz J., Prediction of rivulet heat transfer at the liquid film breakdown, Transactions of IFFM, No. 98, 75-86, 1995.
17. Zhang F., Zhao X., Geng J., Wu Y-T., Zhang Z., A new insight into Marangoni effect in non-isothermal falling liquid films, Exp. Thermal and Fluid Science, 31, 361-365, 2007.

List of figures

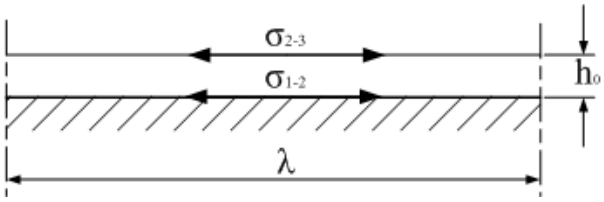

Fig. 1. Schematic diagram of the film breakdown into rivulets, state before the breakdown.

MOST WIEDZY Downloaded from mostwiedzy.pl

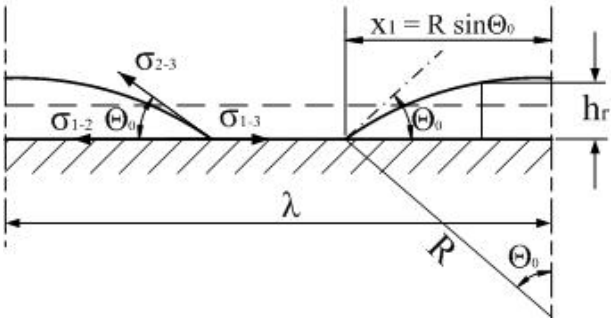

Fig. 2. Schematic diagram of the film breakdown into rivulets, state after the breakdown.

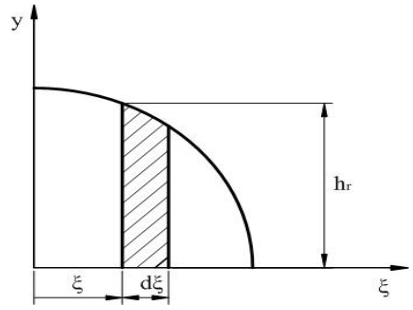

Fig. 3. Schematic of coordinates within the rivulets in film breakdown into rivulets.

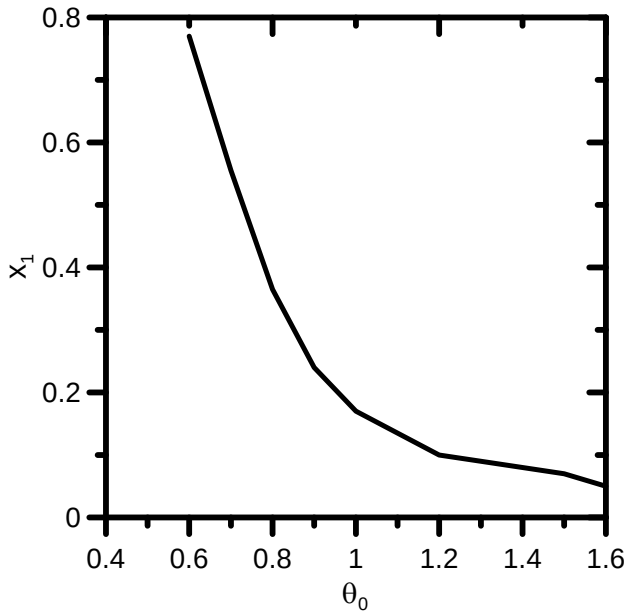

Fig. 4. Distribution of the rate of wetted surface area with respect to the contact angle.

MOST WIEDZY Downloaded from mostwiedzy.pl

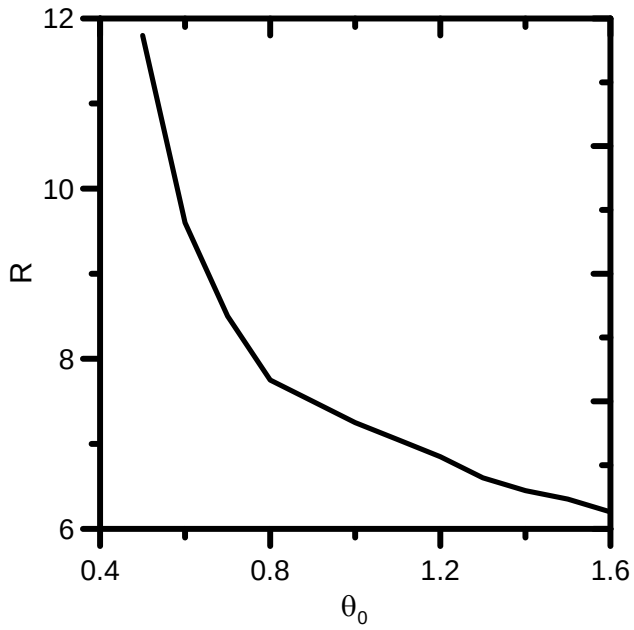

Fig. 5. Distribution of the non-dimensional radius of rivulet with respect to the contact angle.

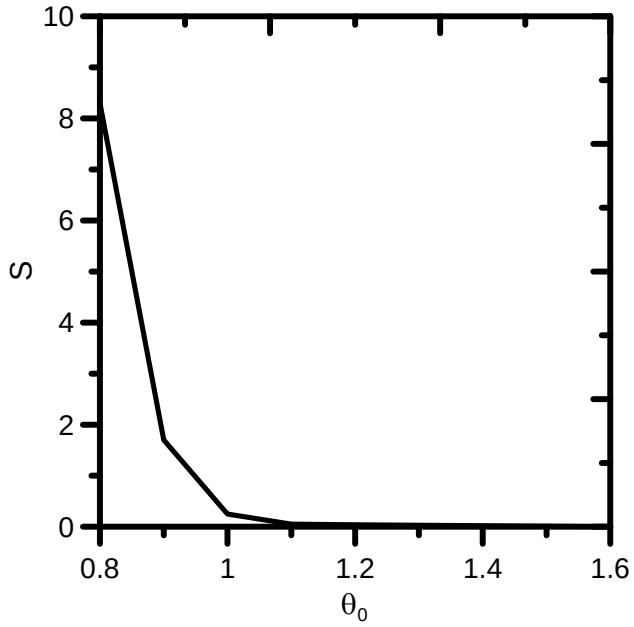

Fig. 6. Distribution of the non-dimensional thickness before breakdown with respect to the wetting angle.

MOST WIEDZY Downloaded from mostwiedzy.pl

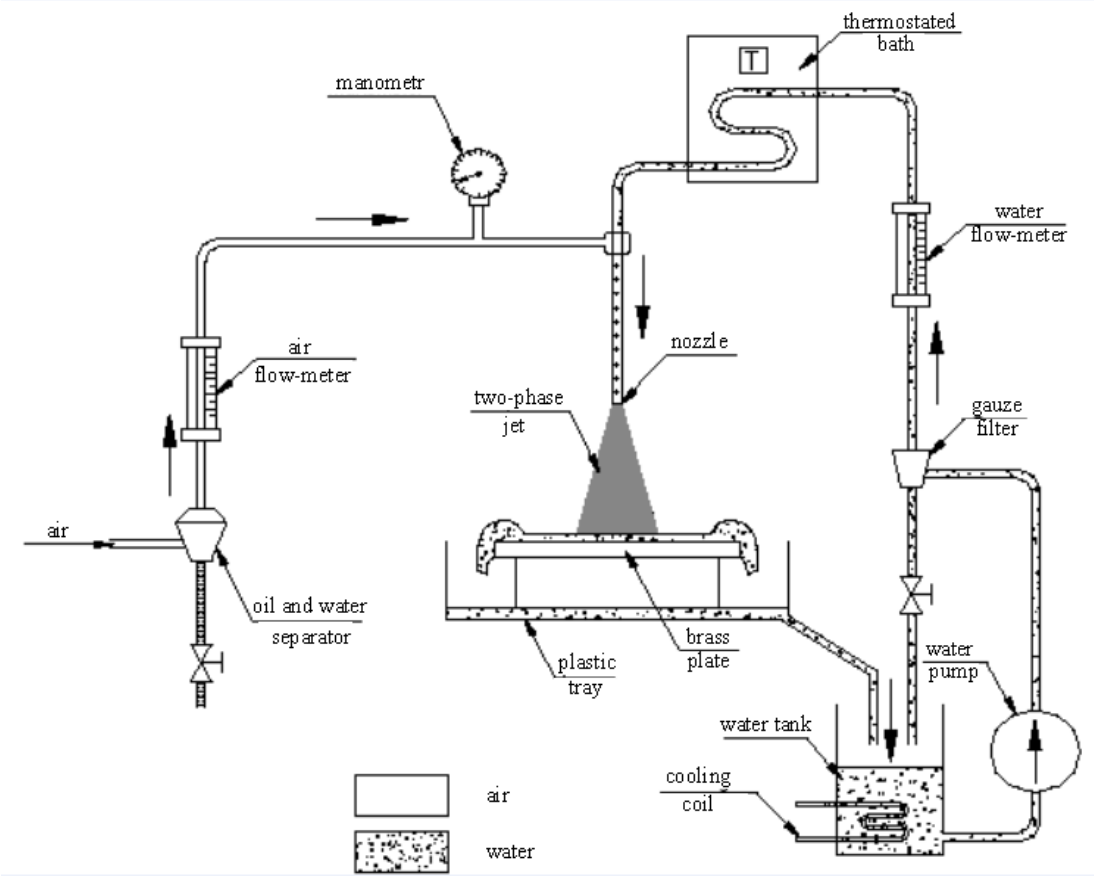

Fig. 7. Schematic diagram of experimental apparatus

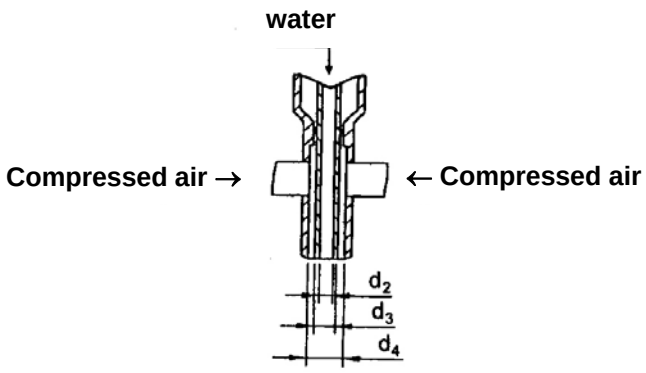

Fig. 8. Schematic of nozzle arrangement

MOST WIEDZY Downloaded from mostwiedzy.pl

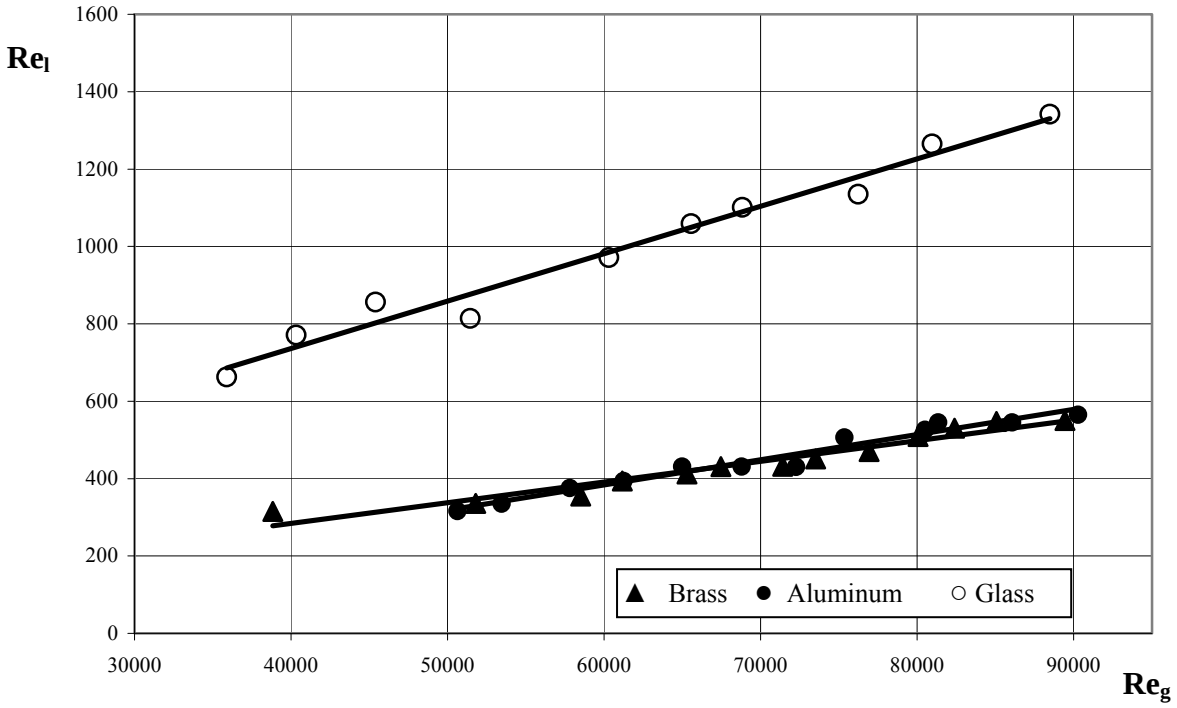

Fig. 9. Results of water film breakdown on a plate due to water-gas jet impingement.

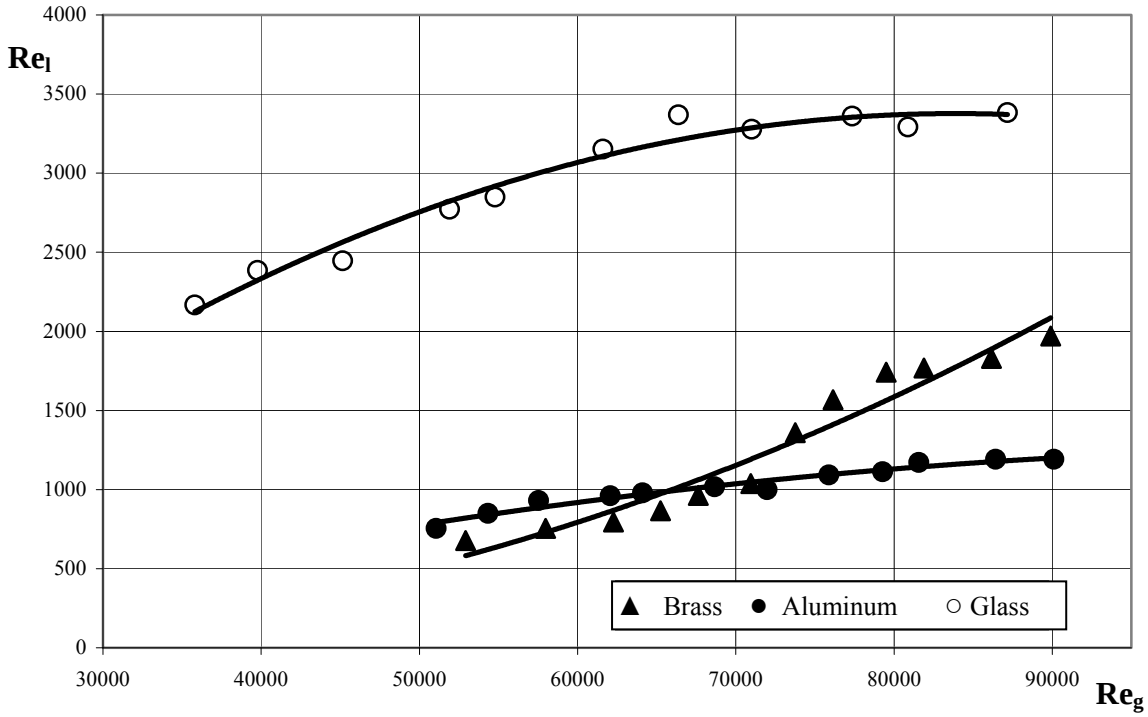

Fig. 10. Results of re-wetting of different plate surfaces after the phenomenon of breakdown from Fig. 9.

MOST WIEDZY Downloaded from mostwiedzy.pl

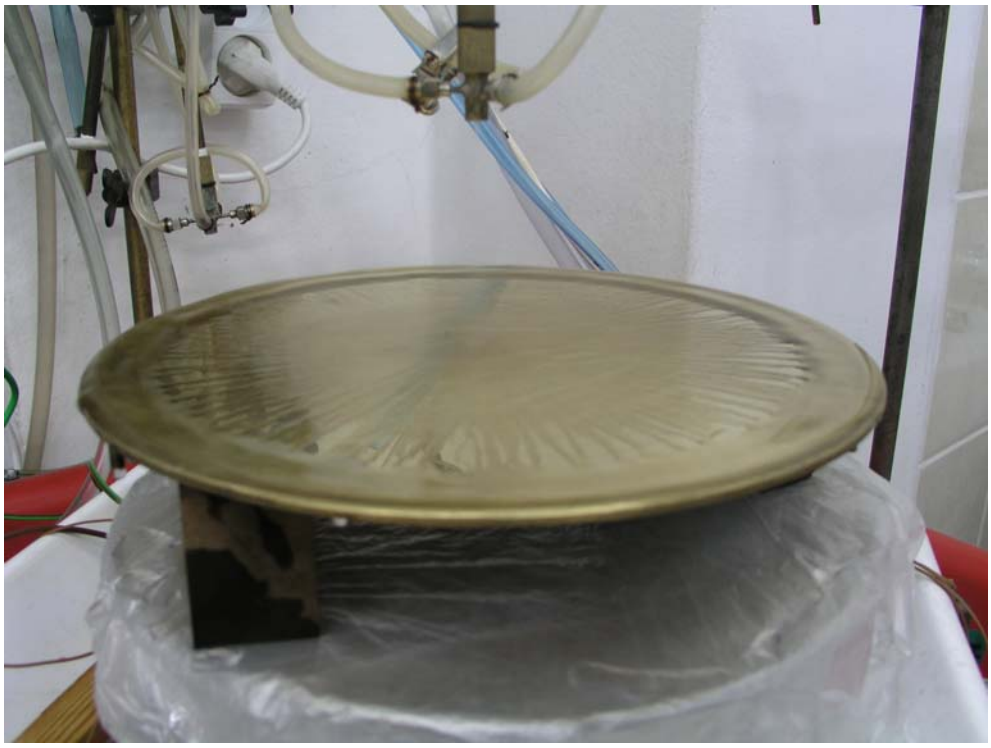

Fig. 11. Phenomenon of breakdown of continuous liquid layer on a brass surface, view after the breakdown, Re_g=89 435, Re_l=550.

Fig. 12. Phenomenon of re-wetting of liquid layer on a brass surface, following the increase of liquid flow rate from the parameters in Fig. 11 to Re_g=89 894, Re_l=1971.

MOST WIEDZY Downloaded from mostwiedzy.pl

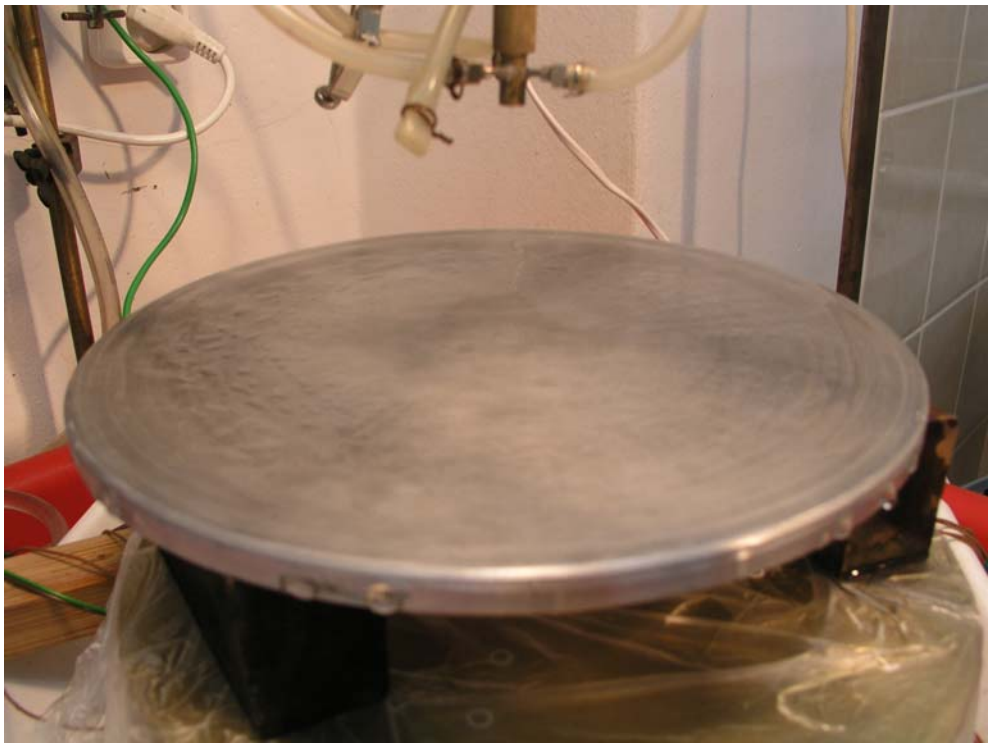

Fig. 13. Phenomenon of breakdown of continuous liquid layer on a aluminum surface, view after the breakdown, Re_g=81 336, Re_l=555.

Fig. 14. Phenomenon of re-wetting of liquid layer on a brass surface, following the increase of liquid flow rate from the parameters in Fig. 13 to Re_g=81 558, Re_l=1171.

MOST WIEDZY Downloaded from mostwiedzy.pl

Fig. 15. Phenomenon of breakdown of continuous liquid layer on a brass surface, view after the breakdown, Re_g=88 483, Re_l=1 342.

Fig. 16. Phenomenon of re-wetting of liquid layer on a brass surface, following the increase of liquid flow rate from the parameters in Fig. 15 to Re_g=87 176, Re_l=3 382.

MOST WIEDZY Downloaded from mostwiedzy.pl

Table 1. Results of experimental measurements for different surfaces

No.	Re_g	Re_l	Number of rivulets	Width of rivulets	Distance between rivulets	Diameter corresponding to breakup
				m	m	m
Brass						
1.	89 435	550	130	0.001	0.002	0.11
2.	89 894	1 971	rewetting			0.12
Aluminum						
3.	81 336	555	64	0.003	0.005	0.13
4.	81 558	1171	rewetting			0.14
Organic glass						
5.	88 483	1342	42	0.002	0.015	0.15
6.	87 176	3382	rewetting			0.16

MOST WIEDZY Downloaded from mostwiedzy.pl