Grzegorz LENTKA, Małgorzata TARGAN

Gdansk University of Technology, Faculty of Electronics, Telecommunications and Informatics, Department of Metrology and Optoelectronics

doi:10.15199/48.2016.11.31

Ellipse-fitting algorithm implementation in the impedance measurement system based on DAQ card with FPGA

***Abstract**. The paper presents an implementation of the ellipse-fitting algorithm in the impedance measurement system based on DAQ card equipped with FPGA chip. The method implementation was tested by simulation means as well as experimentally in the designed and presented measurement system. Finally, the limit values of sampling parameters which assures satisfying accuracy were given.*

***Streszczenie.** W artykule omówiono implementację algorytmu ellipse-fitting w systemie pomiarowym impedancji na bazie karty DAQ z układem FPGA. Implementacja metody została przebadana zarówno symulacyjnie jak również eksperymentalnie w zaprezentowanym systemie. Przedstawiono minimalne wartości parametrów próbkowania dla zapewnienia akceptowalnej dokładności. (**Implementacja metody ellipse-fitting w systemie pomiaru impedancji na bazie karty DAQ z układem FPGA**).*

Keywords: impedance measurement, impedance spectroscopy, ellipse-fitting algorithm.
Słowa kluczowe: pomiar impedancji, spektroskopia impedancyjna, algorytm ellipse-fitting.

Introduction

Impedance is one of the parameters used to determine the state, to evaluate quality and diagnose different types of objects like technical, biological as well as materials properties evaluation. Very interesting and popular is impedance spectroscopy (IS) relying on measurements of the impedance in the specified frequency range to obtain frequency spectrum of the object impedance. The IS is frequently used in such disciplines like: physico-chemistry – to diagnose and monitor anticorrosion protection; in civil engineering – to evaluate structure of the building materials and state of the concrete reinforcement, materials engineering – for testing dielectrics, in medicine for electroimpedance tomography – for diagnosing internal and external diseases and also in many other disciplines. Thanks to such wide spread of possible application areas of IS, more and more accurate and more advanced impedance measurement have been developed in the last tens of years. In many IS applications (dielectrics research, anticorrosion coatings testing, biological tissues analysis) there is a need of the high impedance measurement (of the impedance magnitude above 1GΩ) mostly shunted by relatively high parasitic capacitance (of an order of hundreds picofarads). This implies the measurement at very low frequencies (of an order of milihertz, or even microhertz), which in turn leads to very long measurement time. The long measurement time arises realization difficulties or even doesn't assure the quasi-stationarity of the object under test during the measurement process. This lack of the classical IS methods motivates researchers to find new or modified measurement method allowing to shorten measurement phase to necessary minimum.

The measurement system architecture

Among different impedance measurement method [1, 3], the methods based on digital signal processing are especially interesting. The paper is focused on the method based on ellipse-fitting algorithm [5]. The method was implemented in measurement system based on DAQ card with built-in FPGA circuit [4] allowing to perform part of the signal processing „in-the-fly". Block diagram of the first approach of the discussed system is presented in Fig. 1. The system is based on classical DAQ card plugged into PC or DAQ module connected to PC via USB interface. In connection with the NI-DAQmx driver, the user application running on PC allows to generate excitations signal at A_{out} output and sample response signals at A_{in1} and A_{in2} analog inputs. The acquired signals representation can be then processed to get information of orthogonal parts (Re, Im) of each of the measurement signals. In the paper this task is realized with the aid of ellipse-fitting algorithm [2]. In this case, all the signal processing is performed by PC software.

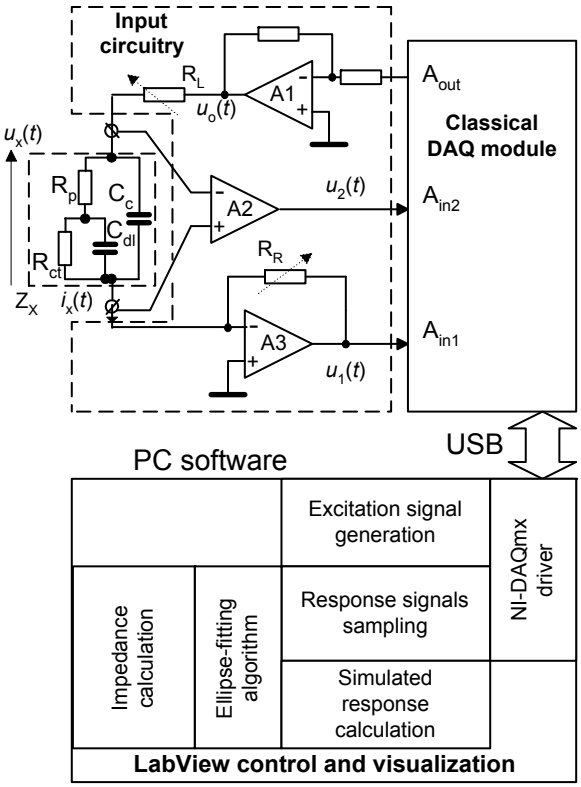

Fig.1. The block diagram of impedance measurement system based on classical DAQ card

To the DAQ module, next part of the system, input circuitry, was connected. It has to main functionalities: at first, it buffers and filters excitation signal generated by DAQ card A_{out} to supply the tested object with $u_o(t)$ exitation signal; and allows to extract two response signals: $u_1(t)$ proportional to current $i_x(t)$ flowing through the measured impedance and $u_2(t)$ proportional to voltage $u_x(t)$ across the measured impedance. The extracted signals $u_1(t)$ and $u_2(t)$

are given to DAQ module analog inputs A_{in1} and A_{in2}, respectively.

In the second approach, it was decided to use the USB-7855R DAQ module equipped with FPGA circuit (Xilinx Kintex series). Thanks to the capability of data processing on the FPGA circuit, the block diagram of the proposed impedance measurement system was modified as shown in Fig. 2.

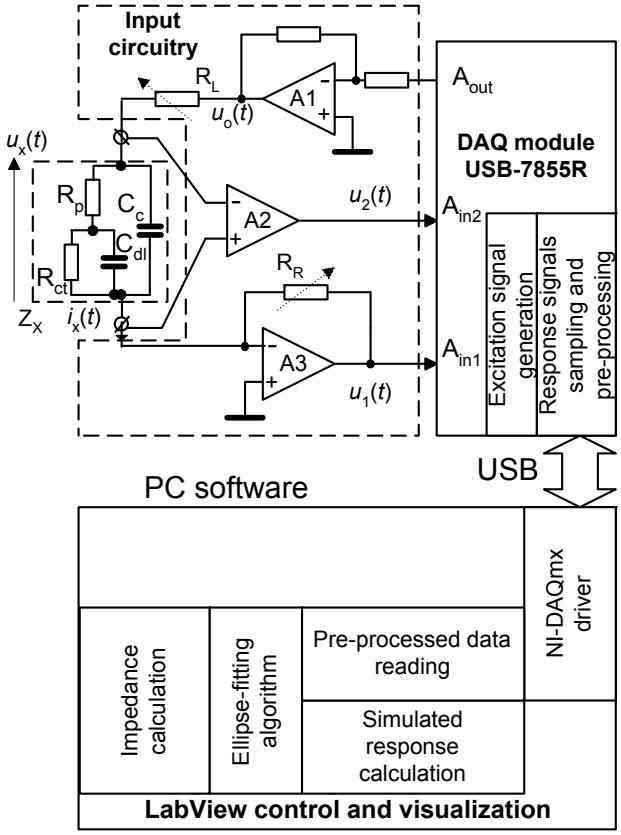

Fig.2. The block diagram the proposed impedance measurement system based on DAQ card with FPGA circuit

The main changes were done in the software layer. The PC software now only sets parameters of the excitation signal generation and the response signals acquisition. The excitation generation process was moved to FPGA - once started by the PC software it works autonomously. Also, the acquisition process is timed and controlled by FPGA. The samples are filtered "on-the-fly" according to selected filters, which allows to remove unwanted noises (e.g. 50 Hz component interfering from power lines. Unfortunately, the ellipse-fitting couldn't be implemented in FPGA structure due to resources limitation and still have to be processed by the PC software.

The ellipse-fitting based implementation

In order to determine the measured impedance, the technical measurement method based on the definition (1) was used.

$$(1) \qquad |Z_m| = \frac{|U_2|}{|U_1|} \cdot R_R \,, \quad \varphi_{Z_m} = \arg(U_2) - \arg(U_1) \,;$$

where: R_R – reference range resistor in the input circuitry, U_1 U_2 – complex representation of the signals $u_1(t)$, $u_2(t)$.

The input circuitry described in the previous section extracts 2 signals: $u_1(t)$ proportional to current $i_x(t)$ flowing through the measured impedance and $u_2(t)$ proportional to voltage $u_x(t)$ across the measured impedance Z_m. The signals are sampled and stored in the memory as two sets of samples $v_1[n]$ and $v_2[n]$. Taking a pair of samples, corresponding one from each set of samples, and using them as a coordinates on plane, one should get an ellipse like curve, example of which is presented in Fig. 3.

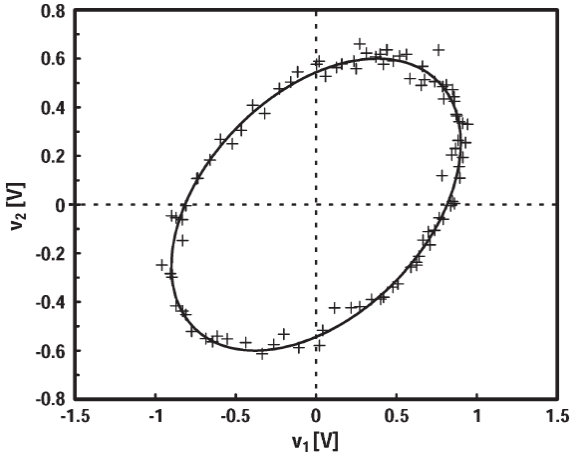

Fig.3. Example of ellipse obtained from samples of signals (crosses) measured in the presented impedance measurement system and fitted ellipse (continuous line)

The ellipse can be described by conic formula (2):

$$(2) \qquad F(v_1, v_2) = av_1^2 + bv_1v_2 + cv_2^2 + dv_1 + ev_2 + f = 0 \,,$$

where: a,b,c,d,e,f – parameters of general conic, fulfilling condition b^2-4ac<0.

Grouping parameters and variables in vectors **A** and **X**, the equation (2) can written in vector form (4):

$$(3) \qquad A = [a,b,c,d,e,f] \,, \; X = [v_1^2, v_1v_2, v_2^2, v_1, v_2, 1]$$

$$(4) \qquad F_A(X) = XA^T \,.$$

The conic model (4) is fitted to experimental data during non-iterative optimization process, based on Lagrange multipliers, leading to obtain minimum goal and finally to find model parameters grouped in vector **A**. More details can be found in [2].

Having the parameters (a, b, c, d, e, f) of the ellipse, the formula 1 can be written in the following form:

$$(5) \qquad |Z_m| = \sqrt{\frac{a}{c}} \cdot R_R \,, \; \cos(\varphi_{Z_m}) = -\frac{sign(a)b}{2\sqrt{ac}} \,.$$

The simulation tests

In the first step, the implemented method was tested by simulation means with the aid of Matlab scripts. The influence of the following parameters on the measurement accuracy was tested:

- number of acquired periods of the measurement signal,
- number of samples per period,
- measurement range usage ratio,
- signal to noise ratio,
- ADC resolution.

The tests were performed assuming resistive components as well as RC circuits as a test object. Using the value of expected impedance calculated on the basis of

MOST WIEDZY Downloaded from mostwiedzy.pl

the known value of the component(s) under measurement, the measurement errors were determined: relative error δ_Z for impedance modulus and absolute error ε_Z for impedance argument. Exemplary results of the simulation tests were presented in Fig. 4 and 5.

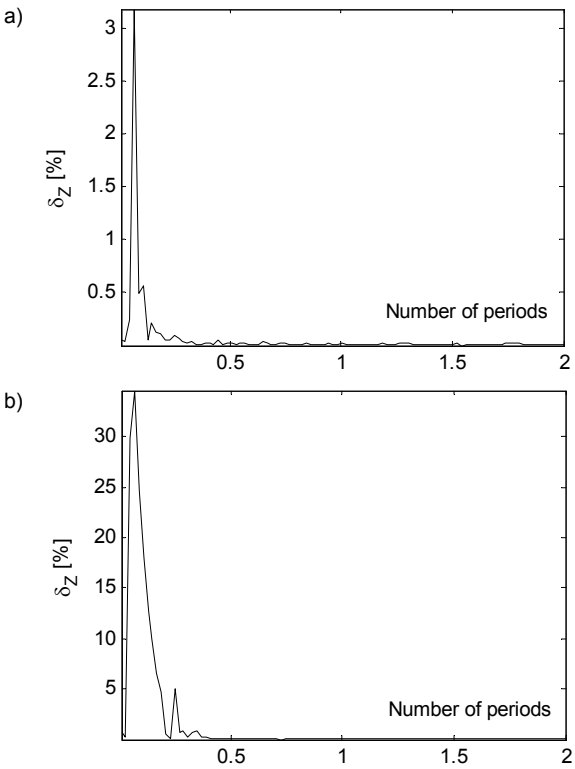

Fig.4. Simulation test results: relative error of the impedance modulus as a function of the number of acquired periods of the measurement signal: a) resistive object, b) RC object

Figure 4 present measurement error of impedance modulus as a function of the number of periods of the acquired measurement signal for two kind of objects. As one can notice, for RC object, the measurement errors are greater for the same part of the acquired period or, on the other point of view, for the same accuracy, there is the need to acquire bigger part of the measurement signal period.

Figure 5 presents the measurement range usage ratio influence on the accuracy. When comparing graphs for two types of objects it can be noted that to assure the required accuracy, the measured signal amplitude should not be smaller than 0.5% ADC range (assuming 16-bit ADC).

The simulation results, shown here only partially, have allowed to determine some limit value of each tested parameter which assures required accuracy (see Table 1 in the next section). The ADC installed on DAQ module has an resolution equal to 16 bit and the simulations have shown that the quantization error can be neglected.

Experimental results

The test in the realized system were performed similarly to the simulations. The following parameters were tested:

- number of acquired periods of the measurement signal,
- number of samples per period,
- measurement range usage ratio.

For each measurement point, the series of measurement were performed and averaged. Measurement errors were calculated the same way as for simulation tests but using the values of components measured with reference RCL meter.

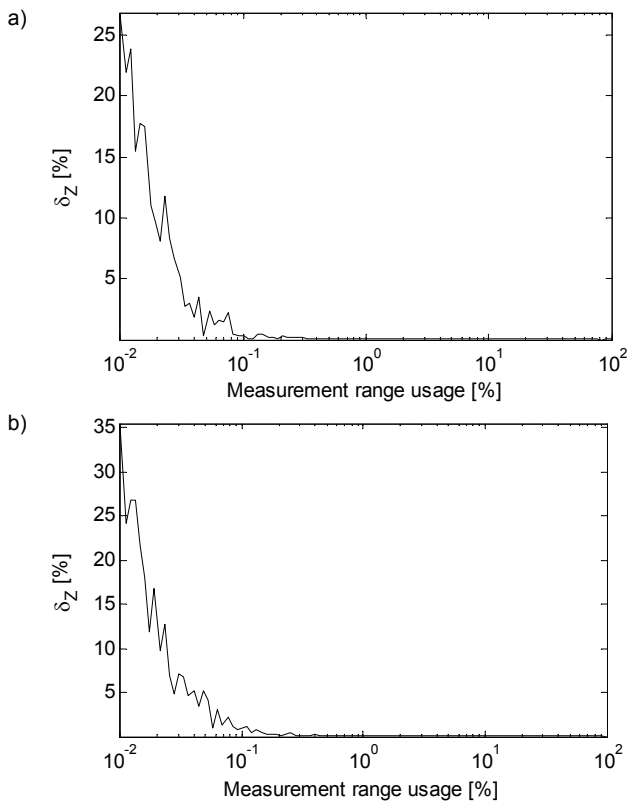

Fig.5. Simulation test results: relative error of the impedance modulus in relation to measurement range ratio usage: a) resistive object, b) RC object

The results of the experimental tests are presented in Fig. 6 and 7. Figure 6 present measurement error of impedance modulus as a function of the number of periods of the acquired measurement signal for two kind of objects.

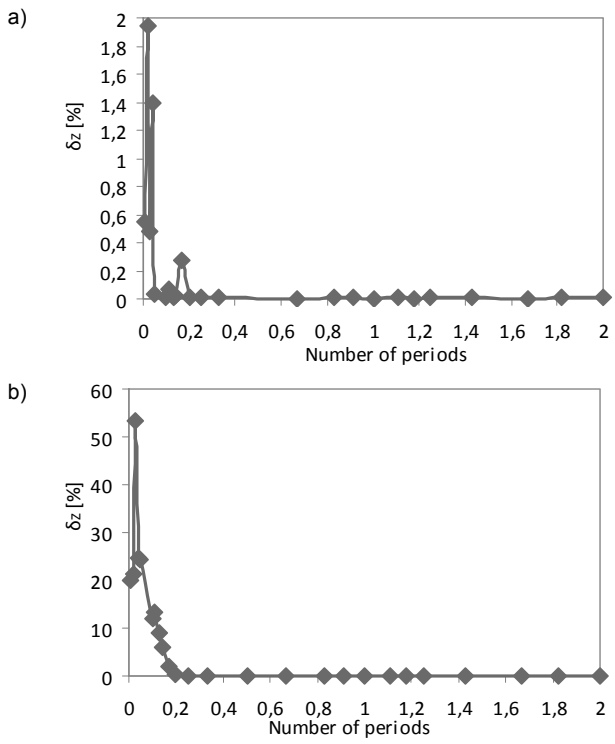

Fig.6. Experimental test results: relative error of the impedance modulus as a function of the number of acquired periods of the measurement signal: a) resistive object, b) RC object

MOST WIEDZY Downloaded from mostwiedzy.pl

Figure 7 presents the measurement range usage ratio influence on the accuracy. When comparing graphs for two types of objects it can be noted that to assure the required accuracy, the measured signal amplitude should not be smaller than 1% ADC range (assuming 16-bit ADC).

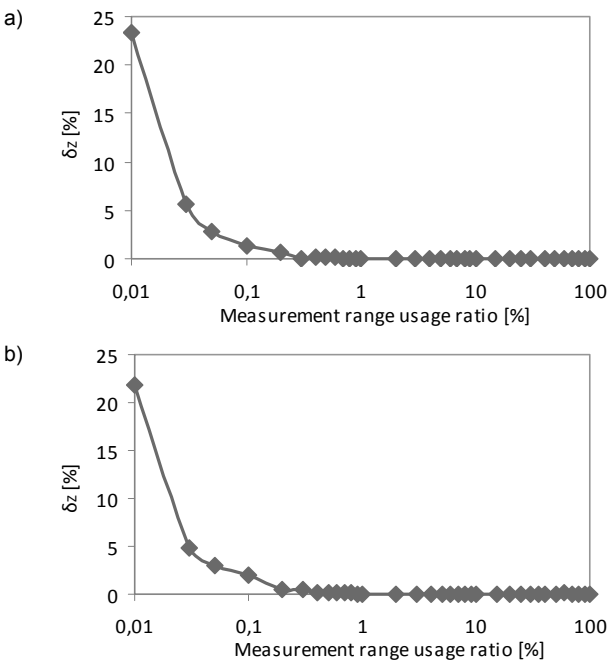

Fig.7. Experimental test results: relative error of the impedance modulus in relation to measurement range ratio usage: a) resistive object, b) RC object

For easier analysis, the results of experimental tests (marked with MEAS) were shown in Table 1 together with simulation results (marked with SIM).

Table 1. Summary of the simulated and experimental results

	Impedance modulus error (max) [%]		Limit	Impedance argument error (max) [rad]		Limit
	R	RC		R	RC	
Number of acquired periods						
SIM	3	35	0.4	0.07	0.7	0.3
MEAS	2	54	0.4	0.07	0.6	0.4
Number of samples per period						
SIM	0.06	60	3	0.002	1.3	3
MEAS	0.2	170	5	0.07	1.2	5
Measurement range usage ratio						
SIM	25	35	0.2%	0.9	1.2	1%
MEAS	24	22	0.3%	1	1.2	2%

The simulation and experimental results are corresponding each other, but experiment results have greater values, which indicates that not all error sources were taken into account during simulation phase. In the columns named "Limit", the value of each analyzed parameter below which the accuracy is not improving meaningfully was given. Analyzing Table 1, it can be noted, that the acquisition should contain at least 0.4 part of the measurement signal period and the range usage should not less than 2%.

Conclusions

The paper describes the ellipse-fitting algorithm implementation in the impedance measurement system based on DAQ card equipped with FPGA chip. The realized implementation has allowed to reach two goals: test the ellipse fitting algorithm in the DAQ card based system and also to create the universal laboratory system capable of testing measurement methods and algorithms implementation with possible relocation of task from PC software to hardware realization (FPGA chip in this case). The use of FPGA gives very high flexibility, high speed processing ("in-the-fly") also making possible parallel processing of different measurement channels. Both goals were met.

It is worth to note, that it is possible to obtain satisfying accuracy while using only 0.4 part of the measurement signal period. This allows to meaningfully shorten measurement phase especially for low and very low frequencies.

The presented measurement system is in the prototype phase thus leaving many directions for further development. The presented solution is not optimized from the final product point of view, but it was treated as a hardware/software platform for future implementation of measurement algorithms.

***Authors**: dr hab. inż. Grzegorz Lentka, Gdansk University of Technology, Faculty of Electronics, Telecommunications and Informatics, Department of Metrology and Optoelectronics, ul. Narutowicza 11/12, 80-233 Gdańsk, E-mail: lentka@eti.pg.gda.pl; mgr inż. Małgorzata Targan, Gdansk University of Technology, Faculty of Electronics, Telecommunications and Informatics, Department of Metrology and Optoelectronics, ul. Narutowicza 11/12, 80-233 Gdańsk, E-mail: malgorzata.targan@gmail.com.*

REFERENCES

[1] Agilent Impedance Measurement Handbook, A guide to measurement technology and techniques, 4th Edition, 10 September, USA 2013
[2] Halíř R., Flusser J., Numerically stable direct least squares fitting of ellipses, *Proc. 6th International Conference in Central Europe on Computer Graphics and Visualization, WSCG '98*. University of West Bohemia (1998), 125-132.
[3] Hoja J., Lentka G., Szybkie metody spektroskopii impedancyjnej, *Rozdział w monografii: Problemy metrologii elektronicznej i fotonicznej, nr 4*, Oficyna Wyd. Pol. Wroc., Wrocław (2011), 201-252.
[4] National Instruments, Getting Started whith R Series Multifunction RIO, http://www.ni.com/pdf/manuals/373256g.pdf.
[5] Ramos P.M., Janeiro F.M., Radil T., Comparative analysis of three algorithms for twochannel common frequency sinewave parameter estimation: ellipse fit, seven parameter sine fit and spectral sinc fit, *Metrology and Measurement Systems*, 17 (2010), n. 2, 255-270.
[6] Ramos P.M., Janeiro F.M., Radil T., Comparison of impedance measurements in a DSP using ellipse-fit and seven-parameter sine-fit algorithms, *Measurement*, 42 (2009), n.9, 1370-1379.
[7] Ramos, P.M., Janeiro, F.M., Tlemcani, M.; Serra, A.C., Recent Developments on Impedance Measurements With DSP-Based Ellipse-Fitting Algorithms, *IEEE Trans. on Instrumentation and Measurement*, 58 (2009), n.5, 1680-1689

MOST WIEDZY Downloaded from mostwiedzy.pl