High-quality Experiment Dedicated to microGravity Exploration, Heat Flow and Oscillation Measurement from Gdańsk

A. Dabrowski, A. Elwertowska, J. Goczkowski, K. Pelzner, S. Krawczuk
Departament of Mechanics and Mechatronics
Gdańsk University of Technology
adadabro@pg.edu.pl

***Abstract*—In this paper we propose HEDGEHOG (High-quality Experiment Dedicated to microGravity Exploration, Heat flow and Oscillation measurement from Gdańsk) REXUS experiment to investigate vibrational and heat flow phenomena during the whole (ascent, microgravity phase, descent and recovery) flight of a sounding rocket.**

First, a proposed system of cantilever beams is discussed to study dynamic behaviour of dummy payload. Dimensioning has been chosen as a results of initial FEM analysis. Secondly, a novel approach to measuring heat flux has been proposed, according to team leader's pending patent. A inverse heat transfer problem (IHTP) has been solved for SMARD (REXUS-18 experiment) data to enable for dimensioning of the experiment. Finally, an initial design is briefly described.

Keywords—REXUS; vibrations; heat flux

I. Introduction

As access to space conditions becomes more available, both technically and economically, scientists' interest in launching finer and more sophisticated experiments grows. This applies now more than ever to fragile by nature biological and chemical experiments [1].

To be qualified for launch, such experiments need to be carefully tested prior to the event. The tests should represent actual launch conditions as closely and in as detailed manner as possible. For this reason, comprehensive measurements of launch conditions are required.

Most important acceptance tests required for module acceptance are vibration tests and thermal tests. This experiment focuses on measuring acceleration and vibrations (especially eigenfrequencies) conditions and heat transfer inside a sounding rocket as a reference for future ground acceptance tests.

II. Scientific and technical objectives

The experiment's scientific challenge is to obtain precise information on acceleration and vibration environment that payload is subject to during whole course of sounding rocket flight. Although an envelope of environmental conditions is known and publicly available, including spectral data [2], their application is usually limited to serving as general guideline due to their lack of details. In case of vibrations, this is usually low frequency range of measurements, as high frequency vibrations tend to be less important for sturdy REXUS experiments.

The second scientific objective is to measure temperature in various locations of the section of the sounding rocket. With such data, it would be possible to create the model of heat flux transfer [3] inside the launch vehicle. Obtained results will allow for precise verification of future payload. Previous REXUS experiments typically included single point temperature measurements, focusing on local effects rather than heat transfer phenomena.

As the experiment will be equipped with high precision MEMS accelerometer, the quality of microgravity could be measured as a secondary objective. This requires despin, so it highly depends on other teams' and Eurolaunch requirements.

One of the greatest technical challenges we detected is to design a dummy payload to study its vibrations. This is due to the fact that the dynamic behaviour of the object depends not only on the external environment, but also on object's own properties, such as system's resonant frequencies.

Another technical challenge is to properly and precisely measure heat flow inside the rocket. As the environment (i.e. convection coefficient) is not well known, the experiment must ensure simple, homogenous heat flow to allow for model identification, and in result, calculation of heat flux in rocket skin.

III. Solution approach

A. Vibrational part

The first part of the experiment focuses on vibrational phenomena. We plan to construct an experiment consisting of several cantilever beams, each tuned to a specific eigenfrequency acting as acceleration amplifiers. In preparation to this application, our science team has found a paper by FH Aachen scientists and REXUS engineers on modal analysis of REXUS 11 rocket [4]. The main resonances were identified to

be: 364 Hz, 600 Hz and 780 Hz. After consultation with our endorsing professors, we decided on 10 cantilever beams with frequencies ranging from 300 Hz to 800 Hz, focusing on resonant frequencies. Initial values were chosen to be: 300 Hz, 364 Hz, 400 Hz, 500 Hz, 590 Hz, 600 Hz, 610 Hz, 770 Hz, 780 Hz, 790 Hz.

In order to fit cantilever beams inside the rocket and distribute them equally, we have designed a round, thin plate with beams on the perimeter. This is considering the centre of mass coordinates and moment of inertia limits required for REXUS experiments. For manufacturability reasons, all beams and the ring that connects them will be water jet or laser cut from aluminium plate (see figure 1).

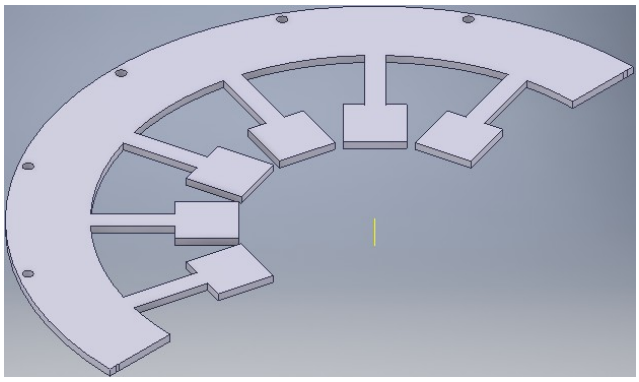

Fig. 1. Aluminium plate with cantilever beams.

Variation in beam resonant frequencies will be achieved by varying their dimensions (other than thickness, see table 1). These sizes were defined upon a Finite Element Method analysis performed in ANSYS (see figure 2). Chosen material is 6060 aluminium, based on its availability and similarity to rocket skin material.

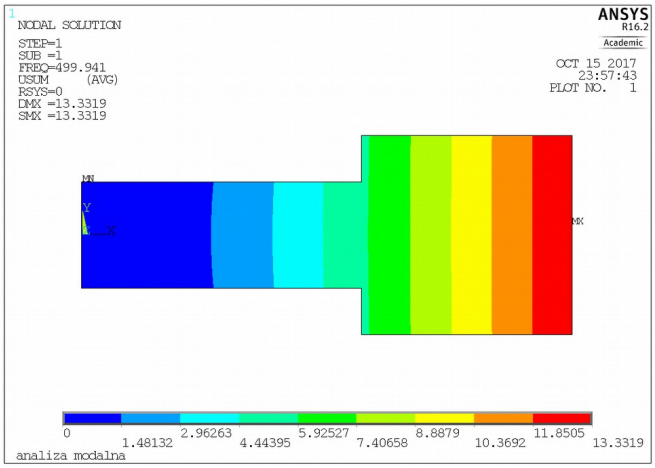

Fig. 2. Beam modal FEM analysis in ANSYS.

TABLE I. CANTILEVER BEAM DIMENSIONS

	dimensions: c=30 mm l x h x b [mm]	*first resonant frequency [Hz]*
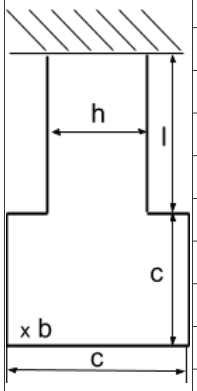	51.2 x 10.0 x 4	300
	43.3 x 10.0 x 4	364
	40.0 x 10.2 x 4	402
	40.0 x 16.2 x 4	500
	40.0 x 22.7 x 4	591
	40.0 x 23.5 x 4	601
	40.0 x 24.3 x 4	610
	35.0 x 29.2 x 4	771
	35.0 x 30.0 x 4	781
	35.0 x 30.0 x 4	790

Each experiment beam will be equipped with a MEMS accelerometer to measure its vibrations (see figure \ref{fig:location}). The bandwidth should allow to capture both first resonant frequency of the beam and full test frequency range required by ECSS for mechanical loads to allow comparison of norm tests with real conditions.

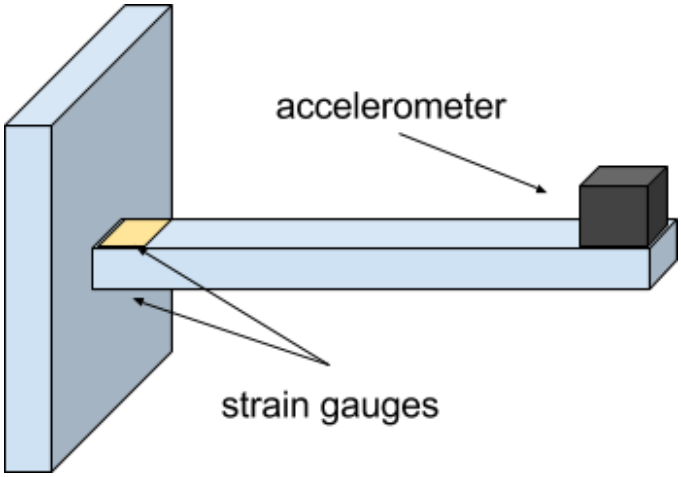

Fig. 3. Accelerometer and strain gauge location

Additionally, each experiment beam will be equipped with a set of two differential strain gauges that will allow to measure its stress and displacement. This could be also achieved by double integration of acceleration values, but this leads to integrating errors [5].

Also, a high precision, wide bandwidth (widest commercially available) MEMS accelerometer will be installed for general (not on “tuned” beams) acceleration and vibration measurement. This would allow for cross-correlation of vibrations of beams and in other parts of rocket. As a secondary objective, the quality of microgravity with 10^{-4} g precision and 15 kHz frequency will be measured and shared with other teams and Eurolaunch team if needed.

MOST WIEDZY Downloaded from mostwiedzy.pl

Finally, a camera will be mounted for constant visual inspection. A specific model will be required to have small size and autonomy (starts recording when powered). This is subject to further analysis of our team.

B. Heat transfer part

The second part of the experiment focuses on heat transfer phenomena. We plan to construct a cylinder of aluminium covered with thick layer of insulation (styrofoam, MLI, to be determined).

The design with necking (see figure 4) forces homogenous heat flow, creating a simple 1D flow situation, easy for model fitting. At each end of the "neck", a thermocouple will be placed in such a way as to interfere the heat flow as least as possible. The bigger inner part will act as a heat tank that will hold a specific amount of thermal energy.

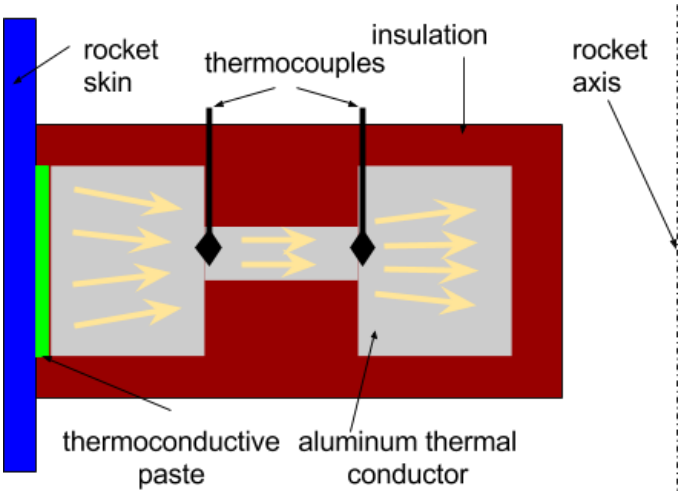

Fig. 4. Heat flux measurement device (patent pending).

The heat transferred Q [J] can be calculated using Fourier's Law [3]:

$$Q = k \cdot A \cdot \Delta T / L \tag{1}$$

where k is thermal conductivity of material [W/(m·K)], A is the cross section [m^2], ΔT is temperature difference [K] and L is length of the necking [m]. By measuring temperatures with thermocouples ΔT can be calculated, while other values are constants. This would allow for calculating external heat flux on rocket skin.

To allow for dimensioning, initial guess for heat flow on the rocket surface was required. This has proved to be difficult, as not only no other REXUS experiment has measured heat flux through rocket skin during flight. A heat flux on rocket skin was measured by DLR [6], but they focused on heat flux from the propulsion engine rather than on this from aerodynamic friction. Most of REXUS teams focused on local temperature changes.

We decided to use SMARD, REXUS-18 experiment [7] data (temperature vs. time, see figure 5) with precise location and geometry of their experiment to solve *inverse heat transfer problem (IHTP)*, i.e. find the heat flux given temperature. As their setup was not designed for it, the results can only be used as a first educated guess.

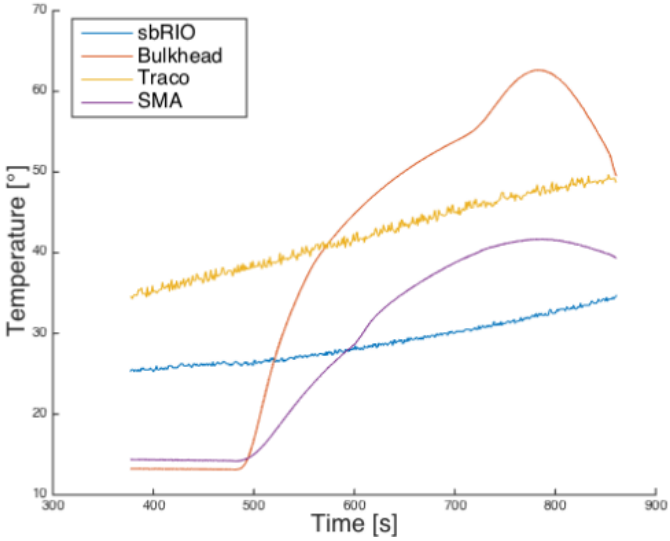

Fig. 5. Temperature curves of SMARD (REXUS-18) experiment [7].

The procedure was based on [8]:

1. Initial guess for heat flux density on walls [W/m^2].
2. Forward heat transfer problem in ANSYS using SMARD CAD model (figure 6).
3. Comparison of results with SMARD data.
4. If, the results are not satisfactory, change heat flux and go to 2.

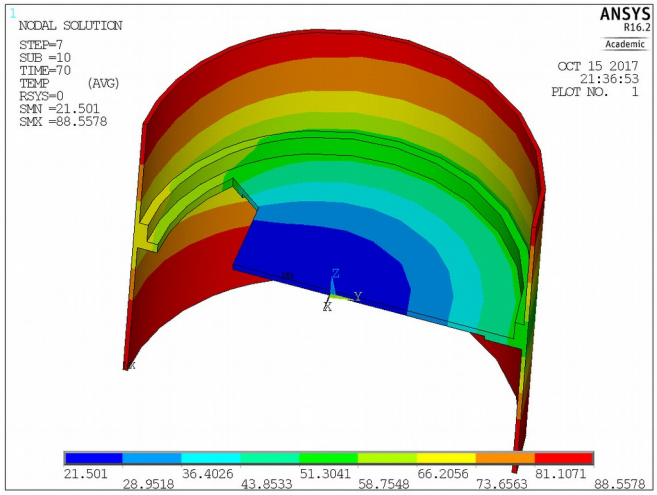

Fig. 6. Heat flux of SMARD (REXUS-18) experiment.

This allowed for dimensioning of our experiment. Initial heat transfer simulation with previously obtained heat flux was performed (see figure 8 and 9, thus suggesting that our experiment can precisely fulfill its goal. We would like to further verify this idea in REXUS programme.

MOST WIEDZY Downloaded from mostwiedzy.pl

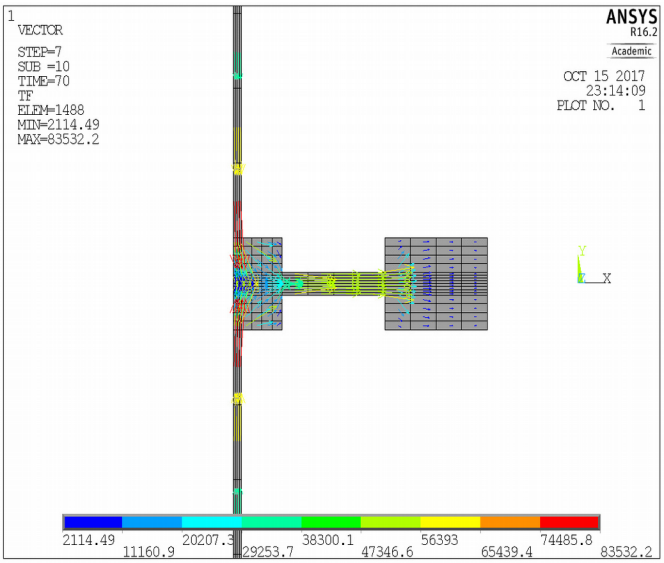

Fig. 7. ANSYS simulation of our heat transfer experiment. Vectors show heat flux. Note 1D flux in the necking.

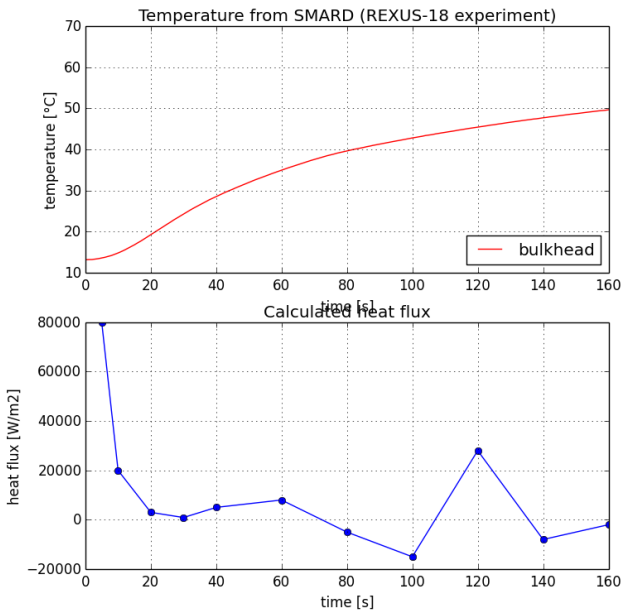

Fig. 9. Results of simulation of our heat transfer experiment: calculated heat flux.

IV. Experiment Setup

The mechanical system consists of two cylindrical parts. Upper one consists of a plate where electronics will be placed. It is connected to vibration experiment with a thick ring that allows for mounting it to rocket with radial bolts (to be discussed with Eurolaunch). Lower part is a thermal cylindrical structure that will be bolted radially to skin surface. It is covered by layer of insulation. The camera will be mounted between two cantilever beams, bolted to the beams mounting ring.

Electronics in the project include:

- MCU based on STM32 microcontroller,
- ADCs (Analogue to Digital Converters),
- external memory based on flash memory,
- main digital accelerometer (Analog Devices ADIS16223),
- 8 thermocouples, type T with multi channel amplifiers to thermal experiment,
- 20 foil strain gauges with Wheatstone bridge circuits to differential measurements,
- 10 analogue accelerometers,
- 3 RTDs (resistance thermometer, resistance temperature detector) temperature sensor,
- digital pressure sensor,
- step-down voltage converters for camera, MCU and sensors,
- current sensor, to detect if the camera is working
- external camera with own SD memory card.

Every analogue sensor will include a passive RC low pass filter. RC filters will be used to cut off the noise that are results of Foucault currents in the connections, conductors and paths on the PCB board.

For each pair of foil strain gauges (attached above and below the beams) a Wheatstone bridge will be added to compensate for the influence of temperature. This type of connection is a differential circuit. Differential circuit double the measurement signal and (with appropriate calibration, by selection of resistance) increase accuracy.

Our experiment setup is presented in figure 9.

Acknowledgments

We would like to acknowledge all Gdansk University of Technology staff that helped us during preparation of our proposal, especially: L. Dabrowski, E. Wittbrodt, M. Galewski, J. Wajs from Faculty of Mechanical Engineering, R. Rutkowski from Faculty of Civil Engineering and P. Raczynski, M. Niedzwiecki and M. Meller from Faculty of Electronics, Telecommunication and Informatics.

MOST WIEDZY Downloaded from mostwiedzy.pl

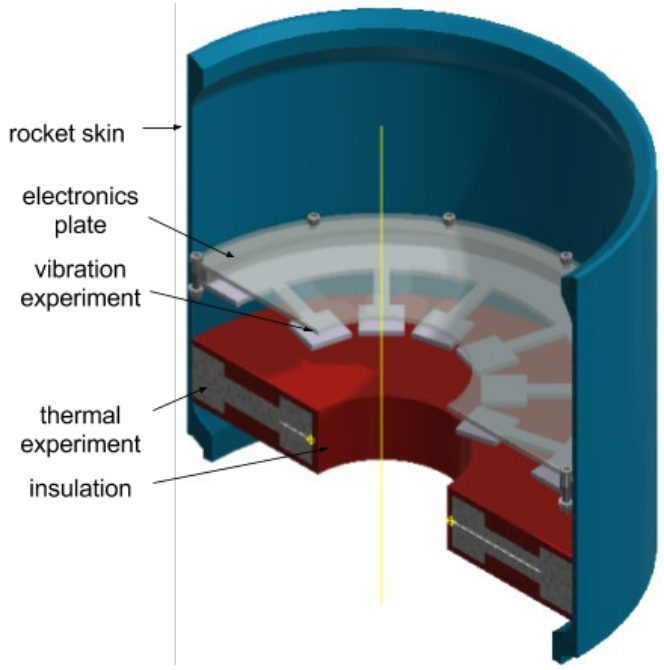

Fig. 9. Experiment cross-section.

REFERENCES

[1] C. A. Evans, J. A. Robinson, International Space Station Science Research Accomplishments During the Assembly Years: An Analysis of Results from 2000-2008, NASA/TP–2009–213146, NASA, Houston, TX, 2009

[2] T. P. Sarafin, Spacecraft structures and mechanisms: From Concept to Launch, Kluwer Academic Publishers, 2nd edition, 1997

[3] T. L. Bergmann, A. S. Lavine F. P. Incropera, D. P. deWitt,, Fundamentals of heat and mass transfer, 5th edition, CRC Press, 2007

[4] A. Gierse et al., Experimental in-flight modal-analysis of a sounding rocket structure, Proceedings of 21st ESA Symposium on Rocket and Ballon related Research, Thun, Switzerland, Volume: ESA SP-721, 2013

[5] Eurolaunch, Rexus User Manual, v.7.14, 2016

[6] Y. K. Thong et al., Numerical double integration of acceleration measurements in noise, In Measurement, Volume 36, Issue 1, 2004, pages 73-92,

[7] D. Suslov, A. Woschnak, D. Greuel, M. Oschwald, Measurement techniques for investigation of heat transfer processes at European Research and Technology Test Facility P8, Proceedings of German Aerospace Congress 2005,

[8] M. Grulich et. al., SMARD-REXUS-18: Development and verification of an SMA based CubeSat solar panel deployment mechanism, Proceedings of 22nd ESA Symposium on Rocket and Ballon related Research, Tromsø, Norway, 2015

[9] C. Balaji, B. K. Reddy, H. Herwig, Heat Mass Transfer (2013) 49: 1771. https://doi.org/10.1007/s00231-013-1213-0

MOST WIEDZY Downloaded from mostwiedzy.pl