VPS VIBRATIONS IN PHYSICAL SYSTEMS

DOI: 10.21008/j.0860-6897.2021.1.06
Vibrations in Physical Systems, 32(1):2021106, 2021

A New Direct-Sequence Spread Spectrum Signal Detection Method for Underwater Acoustic Communications in Shallow-Water Channel

Iwona KOCHAŃSKA

Corresponding author: Iwona KOCHAŃSKA, email: iwona.kochanska@pg.edu.pl

Politechnika Gdańska, Wydział Elektroniki, Telekomunikacji i Informatyki, ul. G. Narutowicza 11/12, 80-233 Gdańsk

Abstract Direct-Sequence Spread Spectrum (DSSS) is one of the modulation and coding techniques used in Underwater Acoustic Communication (UAC) systems for reliable data transmision even at low signal levels. However, in a shallow water channel, there is a strong multipath propagation which causes a phase fluctuation of the received signal, affecting the performance of the spread-spectrum system. The article presents a differential method for DSSS signal detection. It is based on the calculation of the correlation coefficient of adjacent segments of signal at the output of filter matched to the spreading sequence used in the transmitter. A positive value of the correlation coefficient means that a given modulation symbol carries the same information bit as the previous one; a negative value means that the opposite bit has been transmitted. The reliability of the proposed method has been compared to classical method of DSSS signal detection, which consists in detecting the information directly from the signal at the output of the matched filter. Simulation and measurement tests of underwater acoustic communications in strong multipath propagation conditions have shown that the proposed method allows obtaining lower values of the DSSS transmission Bit Error Rate (BER) than the classical detection technique while maintaining the same data transmission rate.

Keywords: underwater acoustic communications, UAC, direct-sequence spread spectrum, DSSS

1. Introduction

Underwater Acoustic Communications (UAC) has numerous applications. Many of these systems operate in shallow waters. These include communication systems for Autonomous Underwater Vehicle (AUV) remote control, surveillance of certain water bodies for security and environmental monitoring, and communication with and between manned and unmanned underwater vehicles.

Communications performance of shallow underwater channel is strongly limited due to multipath propagation, temporal and spatial variability, and noise [1-2]. Safe and reliable data transmission system has to efficiently utilize the available channel bandwidth and ensure proper detection of transmitted information. This is made possible by communication systems implementing spectrum spreading techniques [3-5].

Direct Sequence Spread-Spectrum (DSSS) technique is used in modern wireless communication systems due to its interference suppression benefits, energy density reduction, fine time resolution and enabling of multiple access [6]. A Feature of DSSS signal that is particularly important for shallow-water UAC systems is the ability to cope with multipath propagation. The spreading operation reduces the sensitivity of data transmission system performance to multipath propagation, improving the Signal-to-Noise Ratio (SNR) of the detection, however, it results in an overall reduction of the effective transmission rate.

The DSSS system can be utilized using differential modulation and detection schemes. Numerous differential DSSS UAC systems have been reported in the literature. In [7] differential correlation detector for the receiver of a direct-sequence system is proposed. The output of the detector is a conjugate multiplication of adjacent despreaded symbols. Two subsequent received baseband modulation symbols are passed through the filter matched to the spreading sequence and than outputs of the matched filters are multiplicated and thus a decision is made on received information. This method is described as being insensitive to the phase fluctuations and multipath interference. The experimental test of spread spectrum communication was conducted in the sea where the water depth was 20~40m, and the communication

distance was 10km. In [8] authors present a method that adopts the Double Differential Phase Shift Keying (DDPSK) modulation to compensate the Doppler shifts. The decoding is performed on the despreaded baseband signal, which is passed through a filter matched to the spreading sequence. The results of transmission tests performed in both, simulation environment and in real conditions in the lake, have been assessed by the authors as satisfactory. In [9] the authors propose a dual differential spread-spectrum technique with double differential encoding of the original information sequence at the transmitting end and dual-difference correlation detector for decoding at the receiving end. The simulation results have shown that using this technique the data transmission can be achived with bit error rate less than 10^{-3} under conditions of SNR equal to -8 dB and with transmitter and receiver being in relative motion with speed of 8m/s. There is no information in any of these publications about the transmission rates during simulation and experimental tests.

This paper presents an original method for differential DSSS signal detection. It is based on the calculation of the correlation coefficient of arguments of adjacent segments of complex-value signal at the output of filter matched to the spreading sequence used in the transmitter. The reliability of the proposed method has been compared to classical method of DSSS signal detection, which consists in detecting the information directly from the signal at the output of the matched filter. Simulation and measurement tests of underwater acoustic communication in strong multipath propagation conditions have shown that the proposed method allows obtaining much lower values of the Bit Error Rate (BER) than the classical detection technique while maintaining the same data transmission rate.

2. DSSS modulator and demodulator

The process of DSSS signal generation in the UAC system transmitter is as follows. As shown in Fig. 1 the input data stream d(t) is formed into a stream of constellation points from a set {-1; 1}, where -1 means that the current information bit is the same as the previous one, and 1 means that the current information bit is different. Next, the constellation symbols are combined with PN sequence m(t) in such a way that a single PN sequence is multiplied by a single constellation point. The PN sequence used is m-sequence of rank 8, so its length is equal to 255 samples. The product is upsampled by a factor of $R = f_s/B$, where f_s is the sampling rate equal to 200 kHz, and B denotes the system bandwidth equal to one of the values from a set: {1 kHz, 2 kHz, 4 kHz, 5 kHz, 8 kHz}. Such a prepared digital signal $x(t)$ modulates the phase of the carrier wave of frequency f_c equal to 30 kHz. Table 1 shows the upsampling factor R, number of samples in a single modulation symbol N_s, symbol duration T_s, and transmission rate depending on the signal bandwidth B.

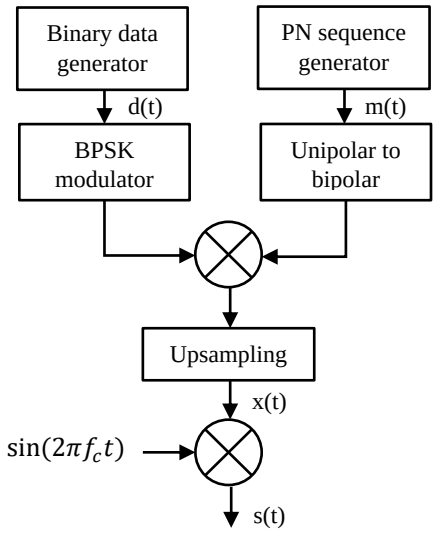

Fig. 1. DSSS modulator block scheme.

MOST WIEDZY Downloaded from mostwiedzy.pl

Tab. 1. Parameters of DSSS communication signals.

Bandwidth B	Upsampling factor R	Symbol length N_s	Symbol duration T_s	Data transmission rate
1 kHz	200	51000	255.0 ms	3.92 bps
2 kHz	100	25500	127.5 ms	7.84 bps
4 kHz	50	12750	63.75 ms	15.69 bps
5 kHz	40	10200	51.00 ms	19.61 bps
8 kHz	25	6375	31.88 ms	31.37 bps

At the receiver side (Figs 2a-2b), the input signal $y(\mathrm{t})$ is passed through the passband quadrature demodulator. Next, the complex-value digital signal is passed through the matched filter with complex-value impulse response $m_c(t) = m(t) + \widehat{m}(t)$, the real part of which corresponds to the PN sequence $m(\mathrm{t})$ used in the transmitter, and the imaginary part $\widehat{m}(t)$ is equal to the Hilbert transform of $m(\mathrm{t})$. The output of the matched filter $r(t)$, which represents the cross-correlation function of signal $y(t)$ and the sequence $\mathrm{m_c}$, is passed to the input of the detection algorithm. During the simulation and measurement tests, two different detection algorithms were used.

2.1. Detection algorithm A

First detection algorithm, which is presented in this paper as a new solution, consists in the calculation of the correlation coefficient C of adjacent segments of signal $r(t)$ at the output of filter matched to the spreading sequence used in the transmitter. Each segment of $r(t)$ is of length N_s which corresponds to a single modulation symbol length (Table 1). The correlation is computed for the arguments of the signal samples (Fig. 2a). A positive value of the correlation coefficient means that the response of matched filter for a given modulation symbol is similar as the response for the previous symbol and thus it carries the same information bit as the previous one. A negative value means that the argument of the filter response is reversed to the argument of the response for the previous modulation symbol and thus the bit that is the negation of the previous one has been transmitted. The rule for making the decision on received bit sequence d_r can be expressed as:

$$d_r[n] = \begin{cases} d_r[n-1] & \text{if } \mathrm{C[n]} \geq 0 \\ \sim d_r[n-1] & \text{if } \mathrm{C[n]} < 0 \end{cases} \tag{1}$$

where n denotes the index of segment of r(t) and the corresponding information bit number.

2.2. Detection algorithm B

The reliability of the proposed detection algorithm has been compared to the second solution, which is called in this paper as the classical method of differential DSSS signal detection. It consists in searching for the peak value in successive segments of the signal $r(t)$ and determining the sign of the real part of this value. The minimum $\mathrm{A_{min}}$ and maximum $\mathrm{A_{max}}$ values are determined for the real part of each segment, and their absolute values are compared with each other. If the maximum value $\mathrm{A_{max}}$ is greater than the absolute value of $\mathrm{A_{min}}$, then the modulation symbol carries a bit information opposite to the previous one. Otherwise – the information is the same. It can be denoted as:

$$d_r[n] = \begin{cases} d_r[n-1] & \text{if } |\mathrm{A}_{max}[\mathrm{n}]| \leq |\mathrm{A}_{min}[\mathrm{n}]| \\ \sim d_r[n-1] & \text{if } |\mathrm{A}_{max}[\mathrm{n}]| > |\mathrm{A}_{min}[\mathrm{n}]| \end{cases} \tag{2}$$

A similar, but non-differential detection algorithm has been described in [10].

MOST WIEDZY Downloaded from mostwiedzy.pl

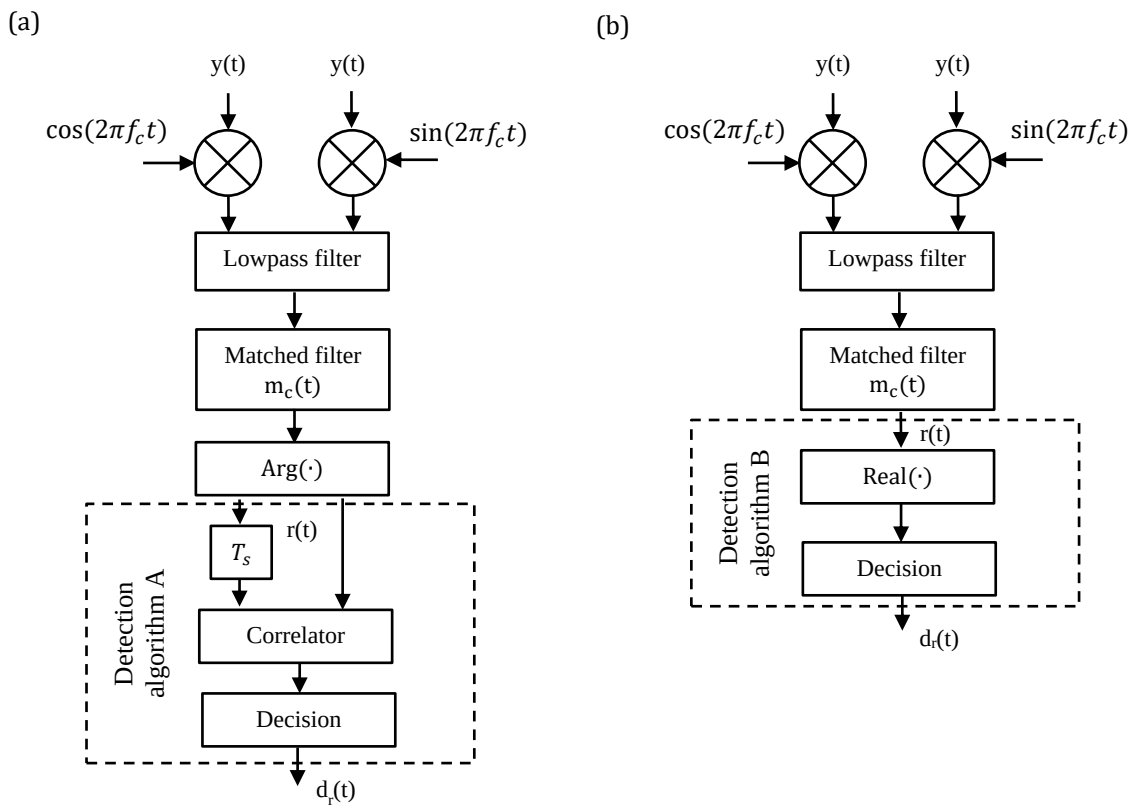

Fig. 2. DSSS demodulator block schemes implementing detection algorithm A (a) and B (b).

3. Simulation tests using Watermark simulator

The efficiency of proposed DSSS signal detection method was tested using the Watermark simulator. It is a freely available benchmark for physical-layer schemes for underwater acoustic communications [11]. Its core is a replay channel simulator driven by at-sea measurements of the time-varying impulse response. For testing DSSS signals, two of the communication channels available at Watermark were selected, represented by impulse responses measured in: Norway-Oslofjord (NOF1) and Norway-Continental Shelf (NCS1). NOF1 is a channel measured in a shallow stretch of Oslofjorden between a stationary source and a stationary single-hydrophone receiver. Both, transmitter and receiver, were bottom mounted at a distance of 750 m. The water depth was 10 m. Channel impulse response were measured using Linear Frequency Modulation (LFM) train signal, occupying the frequency band from 10 kHz to 18 kHz. NCS1 was measured on Norway's continental shelf between a stationary source and a stationary single-hydrophone receiver. As with NOF1, they were bottom mounted. The distance between them was equal to 540 m and the water depth was equal to 80 m. Channel impulse response were measured using Pseudo-Random Binary Sequence (PRBS) probe signal, occupying the same frequency band as LFM during NOF1 channel measurement [11].

Figs 3-4 show modules of baseband complex-value Time-Varying Impulse Responses (TVIR) $h(t,\tau)$ of NOF1 and NCS1 channel as functions of observation time t and delay τ. Also, Power Delay Profiles (PDPs) $P(\tau)$ are presented calculated as sum of squared values of TVIR samples over observation time t. It describes the average signal power reaching the receiver as a function of delay τ and it characterizes the time dispersion of the channel.

MOST WIEDZY Downloaded from mostwiedzy.pl

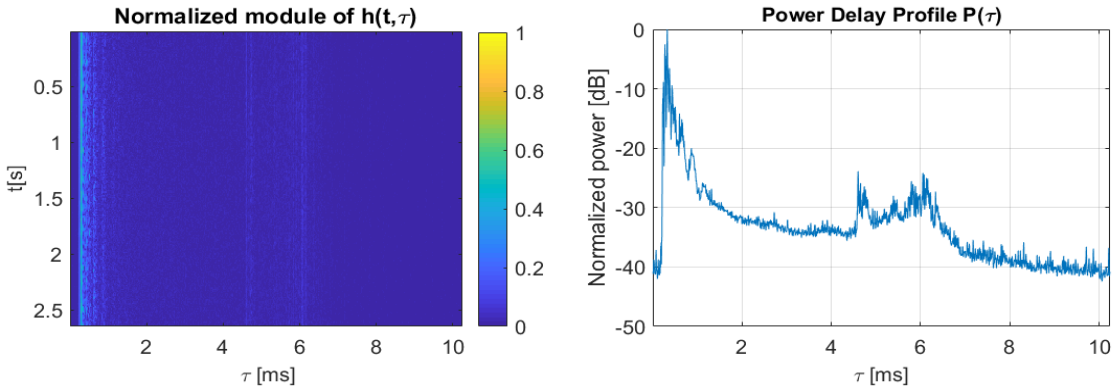

Fig. 3. Module of TVIR and PDP of Watermark NOF1 channel.

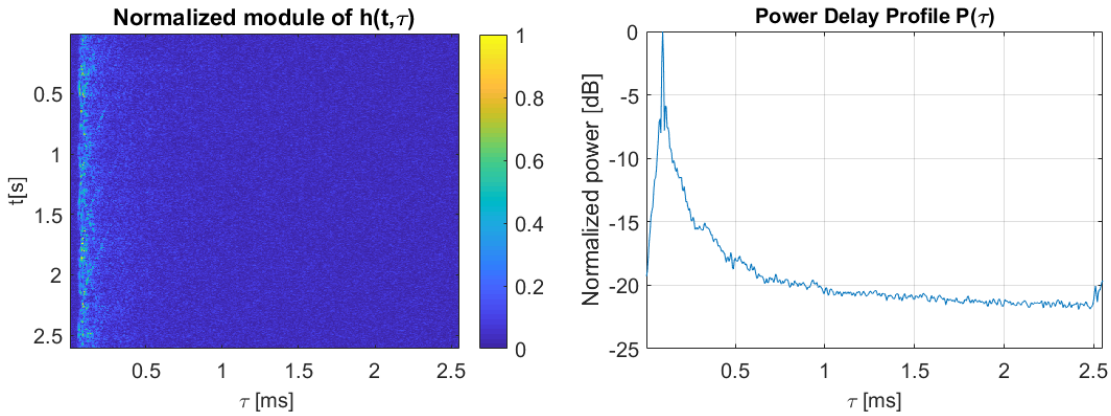

Fig. 4. Module of TVIR and PDP of Watermark NCS1 channel.

In the case of the NOF1 channel, there are clear multipath components seen in the TVIR and the PDP plots. In the case of the NCS1 channel, it can be seen that the impulse response is scattered, as is the signal reaching the receiver of the UAC system.

Tab. 2. Results of simulation tests.

Communication channel	Signal bandwidth	BER detection algorithm A	BER detection algorithm B	Data transmission rate
NOF1	1 kHz	0.326	$< 10^{-3}$	3.92 bps
NOF1	2 kHz	0.028	$< 10^{-3}$	7.84 bps
NOF1	4 kHz	0.036	0.299	15.69 bps
NOF1	5 kHz	0.004	0.309	19.61 bps
NOF1	8 kHz	0.039	0.351	31.37 bps
NCS1	1 kHz	0.396	$< 10^{-3}$	3.92 bps
NCS1	2 kHz	0.213	$< 10^{-3}$	7.84 bps
NCS1	4 kHz	0.149	0.333	15.69 bps
NCS1	5 kHz	0.110	0.304	19.61 bps
NCS1	8 kHz	0.012	0.367	31.37 bps

To fit the DSSS signal to the frequency band in which the NOF1 and NCS1 impulse responses have been measured, carrier frequency of communication signal was equal to 14 kHz. The transmission was simulated using signals of five different bandwidth values, namely 1 kHz, 2 kHz, 4 kHz, 5 kHz, and 8 kHz.

A single transmission frame duration was equal to 6 s, and it was constructed of a variable number of symbols, depending on the signal bandwidth. It was equal to 23, 47, 94, 117, and 188 symbols per frame,

MOST WIEDZY Downloaded from mostwiedzy.pl

for B equal to 1 kHz, 2 kHz, 4 kHz, 5 kHz, and 8 kHz, respectively. During a simulation experiment, 60 frames were transmitted, each constructed using different set of information bits, and each experiment was repeated 20 times. Thus, the total number of information bits transmitted in each system bandwith was equal to 20 × 60 × symbols per frame, which gives the number of bits equal to 27600, 56400, 112800, 140400, and 225600 for B equal to 1 kHz to 8 kHz, respectively.

The reliability of data transmission was measured with the use of Bit Error Rate (BER), calculated as BER $= N_e/N_i$ where N_e is the number of incorrectly detected bits and N_i is the number of all transmitted bits. Mean values of BER achieved for both simulated channels are shown in Table 2.

The simulation experiment have shown that using transmission signal of bandwidth equal to 1 kHz and 2 kHz in both communication channels (NOF1 and NCS1) the use of the algorithm A resulted in a deterioration of the transmission reliability in comparison with the algorithm B. In case of transmission bandwidth equal or greater than 4 kHz, the algorithm A showed several times greater reliability than the algorithm B, regardless the type of the channel. It is worth noting that the transmission tests were carried out without channel coding, which would allow to obtain lower BER in each of the tested channel configuration and transmission bandwidth at the expense of the data transmission rate.

4. Experimental tests

Experimental tests of DSSS communication were carried out in the model pool of the Gdańsk University of Technology. The pool is 40 m long, 4 m wide and 3 m deep. The communication was performed between a stationary source and a stationary single hydrophone, the position of which is presented in Figure 5. Both transducers were immersed at a depth of 1.5 m.

Both the transmitter and receiver of the laboratory model of the UAC system used laptop computers with the Matlab environment for digital signal generation and analysis. Laptop computers communicate with underwater HTL-10 telephones from Sonel Sp. z o.o., developed for the needs of the Polish Navy. It performs the generation of the communication signal, and an analysis of the received signals, with the use of digital signal processors by Texas Instruments: a 16-bit TMS320VC5416 fixed-point processor, and a TMS320C6713B (DSP) 32-bit floating-point processor. It contains multichannel analogue-to-digital converters with a 16-bit resolution and a maximum sampling rate of 250 kHz. The source of the sampling rate is an AD9834 direct digital synthesis. circuit from Analog Devices. The underwater telephone works with a NI-USB6363 external recording and generating device from National Instruments. The HTL-10 devices pass the analog signal to a hydroacoustic transducer and receive the signal from a receiving transducer. Both the transmitting and receiving transducers are omnidirectional transducers with a resonant frequency of 34 kHz [10].

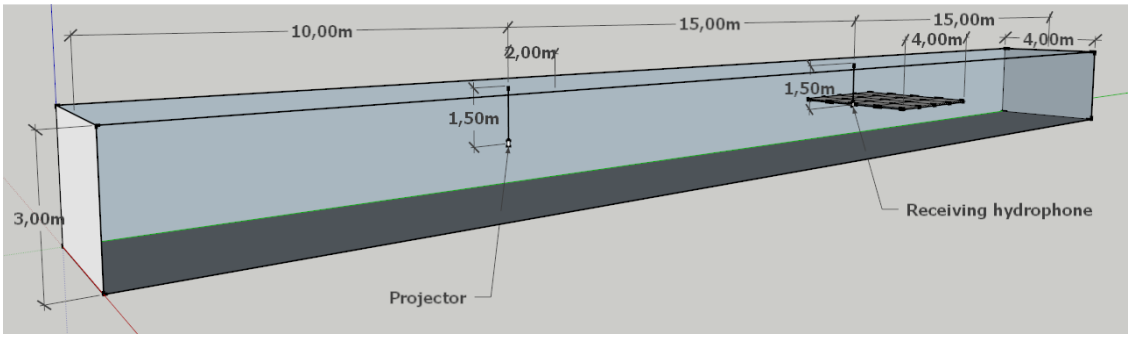

Fig. 5. The dimensions of the model pool and the location of transmitting and receiving transducers [10].

The DSSS communication tests were preceded by the measurement of the impulse response of the communication channel performed by the correlation method with the use of a Pseudo-Random Binary Sequence (PRBS) signal, based on an m-sequence of rank 8. The carrier frequency f_c was equal to 30 kHz, the sampling rate f_s was equal to 200 kHz, and the bandwidth of the probe signal was equal to 4 kHz. The module of TVIR and PDP are shown in Fig. 6. It can be clearly seen that the communication channel in the model pool is characterized by strong multipath propagation.

MOST WIEDZY Downloaded from mostwiedzy.pl

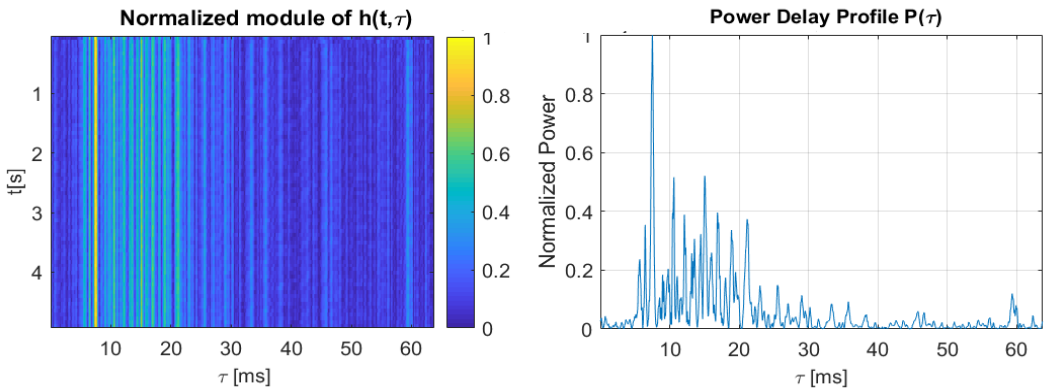

Fig. 6. Module of TVIR and PDP of communication channel in the model pool.

During communication tests DSSS signals of different bandwidths were used (Table 1). Transmission frames contained the same number of symbols as in case of simulations using the Watermark software. During each test, which was repeated 20 times, 60 frames were sent. Thus, the total number of information bits transmitted in each system bandwith was the same as during the simulation tests. The received SNR was in the range of 15 - 17 dB.

Tab. 3. Results of experimental tests.

Signal bandwidth	BER detection algorithm A	BER detection algorithm B	Data transmission rate
1 kHz	$< 10^{-3}$	$< 10^{-3}$	3.92 bps
2 kHz	0.021	0.080	7.84 bps
4 kHz	$< 10^{-3}$	0.240	15.69 bps
5 kHz	0.003	0.230	19.61 bps
8 kHz	0.154	0.228	31.37 bps

The results of communication tests are shown in Table 3. As in case of Watermark simulations, the experimental transmission tests were carried out without use of channel coding. In the transmission bandwidth equal to 1 kHz, the use of both detection algorithms allowed to achieve BER lower than 10^{-3}. In case of bandwidth equal to 2 kHz, the use of algorithm A gave a result almost four times better than the use of algorithm B. In the 4 kHz and 5 kHz bandwidths the improvement was even greater. Algorithm A made it possible to obtain BER lower than 10^{-3} in bandwidth equal to 4 kHz and BER equal to 0.003 in 5 kHz-bandwidth, while in the case of algorithm B, every 4th bit of information was received incorrectly. Also in the case of bandwidth equal to 8 kHz, algorithm A showed better reliability, although here the bit error rate was much higher than in other transmission bandwidths.

5. Conclusions

A new algorithm of differential DSSS signal detection, based on calculation of correlation coefficient of the response of the matched filter to received modulation symbols has been tested in UAC simulations using Watermark software and in experimental tests carried out in a model pool. Its reliability has been compared to the detection algorithm B, which consists in checking the sign of the extremum peak at the output of the matched filter. The tests of UAC communications has been performed using DSSS signals of five different bandwidth values. In almost every case, the use of the proposed algorithm A made it possible to obtain better transmission reliability than the use of the algorithm B.

During the Watermark simulation tests using algorithm A, the lowest reliability was achieved in transmission bandwidth equal to 1 kHz. In experimental studies, however, in strong multipath propagation conditions, the worst result was obtained for the bandwidth equal to 8 kHz. The best reliability was achieved for communication signals of bandwidth equal to 1 kHz and 4 kHz. In this case, the BER was less than 10^{-3}. The transmission rate in 4 kHz bandwidth was equal to 15.69 bps, which is a satisfactory result for UAC

MOST WIEDZY Downloaded from mostwiedzy.pl

numerous applications where it is necessary to transmit control commands (for example to control AUVs) and there is no high data rate required. In the same channel configuration, the use of the detection algorithm B allowed to obtain a BER greater than 0.1, which indicates the need to implement a channel coding in order to improve the reliability. This in turn would significantly reduce the possible transmission rate.

It is worth noting that the reliability of the detection algorithm A was better during the experimental tests in the model pool than during the simulation tests. Significant reliability differences are especially noticeable in the bandwidth equal to 1 kHz. This is likely to be related to the different nature of impulse responses of tested communication channels. Impulse responses of Watermark channels show the time dispersion, but it is of a different nature than that observed in the impulse response measured in the model pool, where numerous, strong reflections are visible. This indicates the need for further experimental tests of proposed DSSS system under real conditions in inland waters and sea. Also, further research is needed to explain the relationship between the reliability of the DSSS system using the detection algorithm A and the bandwidth of the system.

Acknowledgments

The author would like to thank to Jan H. Schmidt and Aleksander M. Schmidt for technical support during the experimental tests.

References

1. B. Katsnelson, V. Petnikov, J. Lynch. Fundamentals of Shallow Water Acoustics. Springer, 2012.
2. J.H. Schmidt, A.M. Schmidt, I. Kochanska. Performance of Coherent Modulation Scheme Used in Acoustic Underwater Communication System. Vibrations in Physical Systems, 30(1):2019135, 2019.
3. R. A. Scholtz, The Origins of Spread-Spectrum Communications. IEEE Transactions on Communications, 30(5):822-854, 1982.
4. H. J. Zepernick, A. Finger, Pseudo Random Signal Processing: Theory and Application, John Wiley & Sons Ltd. 2005.
5. J. H. Schmidt, Using Fast Frequency Hopping Technique to Improve Reliability of Underwater Communication System. Appl. Sci., 10(3):1172, 2020.
6. I. Kochańska, J. H. Schmidt, Simulation of direct-sequence spread spectrum data transmission system for reliable underwater acoustic communications, Vibrations in Physical Systems, 30(1):2019108, 2019.
7. P. Du, X. Zhu, Y. Li, Direct Sequence Spread Spectrum Underwater Acoustic Communication Based on Differential Correlation Detector, 2018 IEEE International Conference on Signal Processing, Communications and Computing (ICSPCC), Qingdao, China, 2018. DOI: 10.1109/ICSPCC.2018.8567803
8. H. Cui, C. Liu, X. Hong, J. Wu, and D. Sun, An Improved BICM-ID Receiver for the Time-Varying Underwater Acoustic Communications with DDPSK Modulation, 2020 IEEE International Conference on Signal Processing, Communications and Computing (ICSPCC), Macau, China, 2020. DOI: 10.1109/ICSPCC50002.2020.9259494
9. P. Du, S. Xiong, C. Wang, Research on mobile spread spectrum underwater acoustic communication, 2019 IEEE International Conference on Signal Processing, Communications and Computing (ICSPCC), Dalian, China, 2019. DOI: 10.1109/ICSPCC46631.2019.8960756
10. I. Kochańska , R. Salamon , J. Schmidt , A. Schmidt, Study of the Performance of DSSS UAC System Depending on the System Bandwidth and the Spreading Sequence, Sensors, 21(7):2484, 2021.
11. P. van Walree, F. X. Socheleau, R. Otnes, T. Jenserud. The Watermark Benchmark for Underwater Acoustic Modulation Schemes, IEEE Journal of Oceanic Engineering, 42(4):1007-1018, 2017.

© 2021 by the Authors. Licensee Poznan University of Technology (Poznan, Poland). This article is an open access article distributed under the terms and conditions of the Creative Commons Attribution (CC BY) license (http://creativecommons.org/licenses/by/4.0/).

MOST WIEDZY Downloaded from mostwiedzy.pl