An electric ring thruster as auxiliary manoeuvring propulsion system for watercraft – construction analysis

Leszek Matuszewski, Ph.D.
Krzysztof Falkowski, Ph.D.

ABSTRACT

The reported project aimed at examining properties and purposefulness of use of modern electromagnetic bearings for a screw propeller in a prototype version of a synchronous ring motor with rare earths magnets. Bearings of this type generate electromagnetic forces which keep the rotor in a state of levitation. The rotating machine with magnetic bearings can work in any environment which reveals diamagnetic properties (air, vacuum, ***water****, liquid gases, etc.). However, a basic quality of the magnetic bearings is elimination of cooling installation and lubrication, which is necessary for proper operation of rotating machines with rolling and slide bearings, undergoing wear with time. Therefore the lifetime of the machine supported on magnetic bearings is incomparable with others. Also torque losses on this bearing are the smallest, compared to all known types of bearings. Ring thrusters can be used as the main drive for relatively small sea-going and inland vessels, and as manoeuvring drive for ships of arbitrary size, especially for AES (All Electric Ship) type vessels. This type of propeller is extremely useful for any types of abyssal vessels, autonomous and remotely controlled, and on submarines. It can also be used as effective generator of electric current for charging batteries in towing trains, barges for instance. The project consisted of three research tasks:* ***1.*** *Designing, manufacturing and examination of a magnetic bearing on-line controlled by a digital controller,* ***2.*** *Manufacturing a model of a ring thruster and examination of characteristics of a propeller mounted in the ring,* ***3.*** *Examining the ferrofluid seal.*

A concept of the new thruster is a consequence of investigations carried out in Poland upon propellers and magnetic bearings in years 2001-2005.

Key words : Electric motor, steering, magnetism, ferrofluid seals

INTRODUCTION

Variety of tasks performed by inland vessels, in particular extremely difficult navigation conditions in narrow canals and sluiceways require excellent manoeuvring abilities from this type of watercraft. These abilities can be obtained by the use of additional and untypical propulsion systems securing steering quality at extremely low speeds and limiting depth of the water basin. The ring propeller fulfils these requirements the best, due to small power related dimensions and electric supply. Ring thrusters (understood as screw propellers, blades of which are mounted in a ring nozzle, with simultaneous absence of a hub and propeller shaft) can be used as the main drive for relatively small sea-going and inland vessels, and as manoeuvring drive for ships of arbitrary size, especially for AES (All Electric Ship) type vessels. It can also be used during barge towage as an effective generator of electric current charging a set of batteries, for the barge to have an independent source of energy during manoeuvres.

The presented thruster can work in a version without seals, thanks to the use of an electromagnetic bearing and corrosion resistant materials, but this version needs further testing. Contact-free support of the ferromagnetic rotor is obtained using electromagnetic bearings. These bearings generate electromagnetic forces which keep the rotor in a state of levitation. The rotating machine with magnetic bearings can work in any environment which reveals diamagnetic properties (air, vacuum, water, liquid gases, etc.). However, a basic quality of the magnetic bearings is the elimination of installations for cooling and lubrication, necessary for proper operation of rotating machines with rolling and slide bearings. This quality considerably improves the reliability of the entire device.

The proposed thruster makes it possible to eliminate the propeller shaft, which is the source of losses decreasing the efficiency of the entire propulsion system.

Other profits resulting from the use of the ring thruster supported on magnetic bearings are the following :

- its construction allows easy assembly on vessels in operation – increasing manoeuvring abilities at lower expenses than those borne in case of standard modernisations,
- developing a new type of propulsion system revealing high efficiency, dynamics and life time,
- considerable reduction in space required for installing the system on the modernised vessel.

The presented ring thruster has no propeller shaft, thanks to which it has most compact construction than other known propulsion systems. During manoeuvres it can be easily advanced from the hull, and the electric supply from the batteries via an inverter additionally facilitates the operation and the process of rotational speed control. Within the framework of the project, a prototype of the thruster supported on mechanical bearings was manufactured, but the version with an electromagnetic bearing and ferrofluid seal is also being worked out. The ferrofluid seal reveals the smallest drag during rotor operation, and properly reacts to lateral whip. Here the drag is of high significance as the diameter of the sealed area is large. The problem of sealing was recognised while studying the construction of the thruster in a dry version (in opposition to

the wet version, in which the water penetrates the motor inside) where the construction of the device is more complicated but its efficiency is becoming much higher.

The most remarkable solution in the presented concept of a new propulsion system is the use of modern electromagnetic bearings for the screw propeller in the prototype version of the synchronous ring motor with rare earths magnets. So far, a ring thruster with traditional bearings did not undergo sufficiently detailed examination in the past, the same even more refers to the version with a magnetic bearing used as contact-free support for ferromagnetic rotors. The lifetime of devices with magnetic bearings is significantly longer than that of other designs. In the version with magnetic bearings there are no parts which are subject to wear in a traditional meaning of this word, as the rotor works without physical contact with other components. In conclusion, the efficiency of a new-generation ring thruster is twice as high as that of the power units examined in the last century fifties. Then this concept was left aside due to about 18% efficiency, as compared to about 60% efficiency revealed by traditional free-propeller drives. At present, the development of technology and driving systems has provided opportunities for obtaining efficiency of about 40% (variant with the electromagnetic bearing), which along with unique advantages of the use of the ring propeller makes it very attractive for driving tow trains.

PRINCIPLE OF RING THRUSTER OPERATION

A concept of the new thruster is a consequence of investigations carried out in Poland upon propellers and magnetic bearings.

A new type propeller is a genuine contribution to the area of knowledge on water drives and their bearing systems making use of modern and very promising technologies. A few problems need clarifying here. The protecting and accelerating nozzles of ship propellers are in wide use in present shipbuilding. They are used everywhere where high thrust is required at relatively small forward speed. Until recently they have been mainly used on harbour and ocean tugs, trawlers and fishing base ships, drilling platforms, floating cranes, dredgers, and other specialised watercraft, including submarines. Now they are also in common use in driving modules on oceanotechnical objects, where they are most often used as components of dynamic positioning. Their special forms are thrusters and active rudders. An additional advantage of the new solution is possible operation of the screw in the uniform velocity field, both for thrusters and driving modules. Propeller's operation in a uniform field eliminates unfavourable pressure pulses induced in the space around the propeller (with resultant unfavourable vibrations of the entire structure). For the thrusters, eliminating the torque transmission path in which the torque is transmitted from the engine via the gear to the propeller shaft, and transmitting it via a tip ring results in full geometric and dynamic symmetry. This situation is very favourable for the operation and reliability of those devices. An additional, very important factor which considerably improves the reliability of this propulsion system is the innovatory use of magnetic bearings, an action which in the examined case is fully realisable and necessary, and develops this field of knowledge. A very important advantage of the new propulsion system is also extremely high power density, i.e. power related to the mass of the drive, which is much higher than recorded for other types of drives.

Below, a general concept of operation of the ring thruster equipped with electromagnetic bearings is presented.

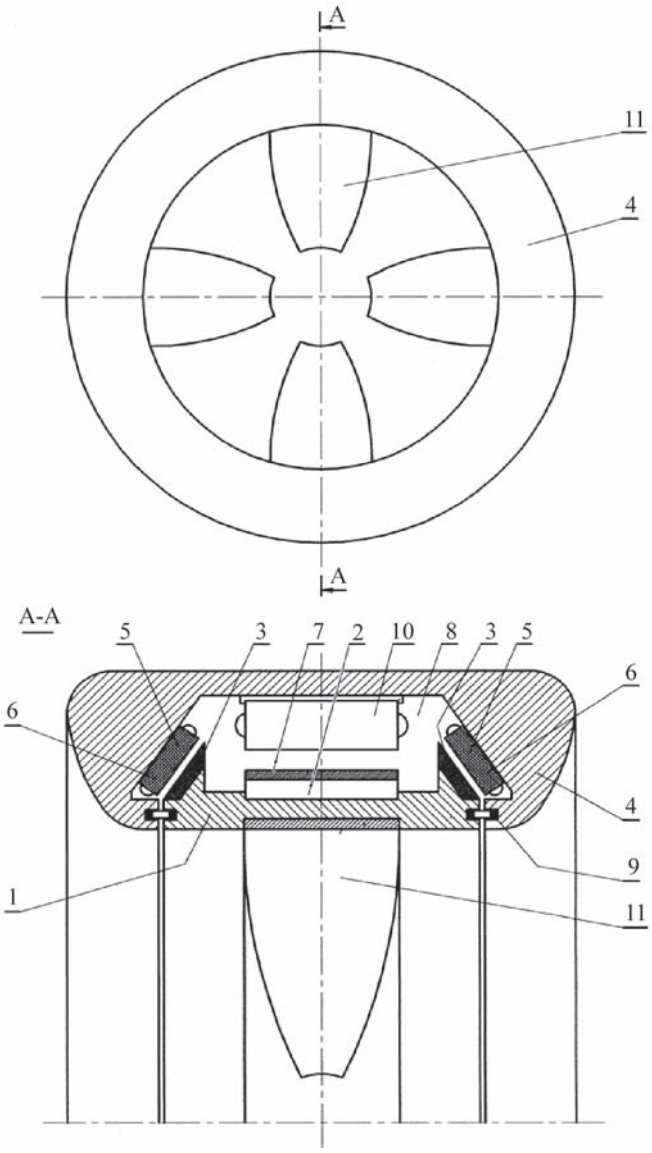

Fig. 1. *General concept of the thruster with a ring propeller, version with magnetic rotor bearing:* ***1.*** *Leading ring,* ***2.*** *Rotor,* ***3****. Bearing raceway,* ***4.*** *Ring housing,* ***5.*** *Electromagnetic bearing forces,* ***6.*** *Electromagnets,* ***7.*** *Magnets,* ***8.*** *Internal space,* ***9.*** *Seal,* ***10.*** *Stator,* ***11.*** *Propeller,* ***12.*** *Passive wheel,* ***13.*** *Ferrofluid seal or labyrinth seal.*

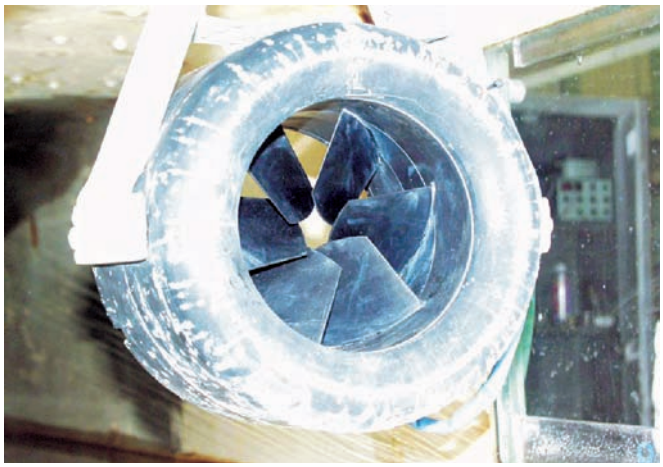

Fig. 2. *Ring thruster during tests in cavitation tunnel, version with ball bearing.*

The bearing centre consists of two magnetic cores, in which eight electromagnet coils are mounted (four differential actuators). Each coil is fed via a power amplifier. Between the

MOST WIEDZY Downloaded from mostwiedzy.pl

magnetic cores the stator of a motor which drives the propeller is mounted. The magnetic bearing is on-line controlled by a digital controller. Due to the presence of strong coupling between the bearing planes, a complex global control system is used.

The position of the propeller in the gap is determined using contact-free sensors of vortex-current or induction type. Other types of sensors cannot be used because of the possible action of sea-water.

CONICAL MAGNETIC BEARINGS

Like for conventional bearings, in the group of magnetic bearings radial, axial and conical bearings can be distinguished. The presented classification is connected with the direction in which the load is carried by the bearing (direction of electromagnetic force generated in the magnetic bearing). Since different types of bearings generate electromagnetic forces in different planes, their construction also differs. The radial bearing is designed to generate electromagnetic forces which counteract radial movements of the rotor. The rotor bearing system most often comprises two radial bearings which limit four freedom degrees of the rotor. Each bearing has two electromechanical actuators and two sensors measuring rotor movements in the air gap. This bearing system is to be complemented by an axial bearing which limits axial movements of the rotor. Bearings of this type are equipped with one electromechanical actuator and at least one sensor measuring rotor position in the bearing's air gap. Thus the bearing system of a rigid rotor is composed of two radial bearings and one axial bearing (five differential actuators and at least five sensors). If we use conical bearings for constructing the bearing centre, we can reduce the number of actuators to four and use only four sensors measuring rotor's position in the air gap. An additional advantage resulting from the use of this type of bearing systems is the ability to support short, large-dimension rotors (having the shape of a ring or disc). Rotors of this type do not have space for placing two radial bearings and one axial bearing. The article presents the construction of a propeller designed for driving submarine vehicles. Lack of space for placing three bearings was the reason why conical bearings were used. At the same time the number of actuators (electromagnets, power amplifiers) and sensors measuring rotor's position in the air gap was also reduced.

The designed bearing centre can be used for supporting large-dimension rotors. In particular, the proposed solution can be used in fan drives on hovercraft, while in helicopters this type of drive can replace the rear airscrew. Devices of this type find very frequent applications in marine technology (thrusters, propulsion systems on underwater vehicles and robots)

An additional advantage of the proposed solution is the use of the magnetic bearing, which considerably improves operating characteristics of the device, which in practice does no need attendance. In classical bearing systems the bearings undergo rapid wear. During manoeuvres, the vehicle is subject to strong gyroscope moment, just being the source of wear of classical bearings. Additionally, signals recorded by the sensors can be used for monitoring the technical state of the vehicle.

Along with numerous advantages, the presented solution reveals some limitations concerning the range of axial loads carried by the bearing. If we want to obtain a large axial force we should tend to reach the maximum possible inclination angle γ. However, when the inclination of the surface is large, it generates strong coupling between the actuators. The 38° inclination angle, used by the authors, secures obtaining required axial component of the electromagnetic force, but is a source of strong coupling between the actuators.

The simplest remedy is to change the inclination angle of the conical surfaces of the actuators and raceways. However, such a change will result in significant reduction of electromagnetic force axial component, which is the basic component carrying the main load.

In the majority of publications on conical bearing designs, the used inclination angles range between 15° ÷ 20°. Selecting an optimum angle to secure required axial force components and, at the same time, limit the coupling between the actuators is the object of authors' further research activities.

FERROFLUID SEALS

A characteristic feature of the conditions in which ferrofluid liquids are used in propulsion systems is high linear speed of the rotor with simultaneous relatively small pressure difference (about. 0.05 Mpa). As the measured data illustrate, the examination was performed for relatively high pressures to check limiting characteristics of the examined liquid. This part of the report is to be meant as a feasibility study, the aim of which was to check whether this type of seal can be used in the examined power unit. The answer to this question is positive and the next step of research will be more detailed examination of boundary values. These investigations are carried out in 2006.

Ferromagnetic, or ferrofluid seals belong to the group of absolutely tight seals, in which the magnetic liquid is kept by the magnetic field concentrated in a small gap between the elements composing, together with the liquid, the sealing system. In practical applications, the height δ of the gap filled with the magnetic liquid equals: $\delta = (0.1 \div 0.3)$ mm. The magnetic field is generated using high-power permanent magnets or electric coils fed by electric current with proper intensity. For the seal to be effective, the magnetic induction B in the gap filled with the liquid is to be equal to: $B = (0.6 \div 0.8)$ T.

In case of seals applied to rotating elements (shafts) the most frequent solution makes use a stationary magnetic system consisting of permanent magnets and pole shoes placed in a housing and generating magnetic field in circumferential gaps, filled with the magnetic liquid, which were created between the rotating shaft and the stationary magnetic system. Due to functional similarity, this seal is sometimes called „fluid O-ring seal". The magnetic liquid is a suspensoid of magnetic particles, having about 10 nm in diameter, in the carrying liquid.

Fe_3O_4 – the magnetite is most frequently used as material for magnetic particles. Other more rarely used materials include nickel, cobalt or their compounds revealing magnetic properties.

The carrying liquid can be an arbitrary liquid used in technology. However, in practical applications liquids revealing good chemical stability and high durability are selected. Of high importance are rheological characteristics of the carrying liquid, as they are the factors deciding on the drag of the seal in motion. Liquids are avoided which reveal toxic properties, as well as those which chemically of physically react with seal components.

The most frequently used carrying liquids include: water, mineral oils and other products of oil refinery, synthetic hydrocarbon or hydrogen fluoride compounds, and organic and inorganic ester compounds.

As compared to other types of seals, the ferromagnetic seals reveal a number of remarkable advantages, such as :

- ★ excellent tightness within the pressure range between 10^{-8} mbar and 3.0 MPa (leakage < 10^{-8} mbar · litre/s)
- ★ low power losses

MOST WIEDZY Downloaded from mostwiedzy.pl

- ★ possible operation at extremely high shaft rotational speeds (up to 30000 rev/min)
- ★ high durability and reliability of operation.

When designing seals with magnetic liquid, some limitations are to be taken into account, as resulting from properties of materials used for their manufacturing, and from the principle of operation of these seals :

- ✦ these seals work efficiently up to the pressure of 5.0 MPa
- ✦ most magnetic liquids lose sealing abilities in temperatures exceeding 130°C
- ✦ for operating conditions with high peripheral speed and higher temperature, a seal cooling system is to be provided
- ✦ the magnetic system of the seal takes relatively much space.

The above characteristics, advantages and disadvantages of the magnetic liquid seals mainly refer to their applications in the gas environment. The subject of the present report is checking whether this method can be used in the water environment. Possibilities of use of magnetic liquids for sealing machines working in the liquid environment have not been satisfactorily recognised yet. Some descriptions of technical solutions can be found for selected cases, such as for instance, seals of ship propeller shafts, or seals of roll passes in track roller cooling systems used in metal mills. However, a lot of important data are unknown, including the range of operating parameters, constructional solutions applied in those seals. Moreover, credible information on the effectiveness and durability of these seals is also missing.

In some research centres experimental works were conducted, which found their description in the technical literature on the subject. Results of these works confirm that the use of magnetic liquid seals for sealing machines in operation in the liquid environment is quite possible.

It is believed at the present stage of research and constructional activities that the basic problem in practical application of magnetic liquid seals for operation in the liquid environment is penetration of the sealed liquid to the magnetic liquid on the interface between the sealing and sealed phases. Due to relative motion of these phases, taking place in the majority of known applications of magnetic liquid seals, this liquid is subject to emulsification which leads to gradual degradation of the seal.

It is noteworthy that along with the dynamics of motion on the phase interface, of fundamental importance for the process of emulsification are physical and chemical characteristics of the magnetic liquid, in particular its carrying part. Some liquids belonging to the group of organic esters are known to reveal strong hydrophobic properties, as a result of which their emulsification in the water environment can be considerably reduced.

The experience gained so far on magnetic liquid seals working in the gas environment, and the information on application of these seals in the liquid environment make it advisable to start the research to assess parameters of useful and effective work, and develop design solutions of these seals.

RING THRUSTER

A ring thruster is a new type of propeller for which there is no experimental data to be used for verifying design calculations.

A characteristic feature of the ring thruster is the absence of a shaft. Propeller blades are fixed to a ring rotating inside the housing, which has the shape of a propelling nozzle. For this reason the ring thruster is closest, with respect to both to the construction and principle of operation, to the Kort nozzle propeller.

The absence of a shaft and no gap between the blades and the nozzle make it impossible to fully rely on results obtained from Kort nozzle propeller examination. What is more, the already existing computer codes developed for designing Kort nozzle propellers cannot be directly used for designing ring thruster either. That is why for this purpose a new code determining hydrodynamic characteristics based on the theory of the vortex lifting surface will be used.

When using this method, some differences between calculated and experimentally recorded results are expected to be observed. To a considerable extent, the level of the torque taken by the thruster will be affected by the drag of the rotating ring to which the blades are mounted. The results of investigations of a propeller equipped with a rotating ring suggest that the expected torque increment may reach as much as a few per cents, at corresponding levels of axial force (thrust).

At the present stage on ring propeller investigations of, there is no data available on how to shape ring propeller blades. Possible comparison calculations, done with the aid of the existing computer code, will allow, the most, the shape of the blades to be determined for preliminary tests in the cavitation tunnel and on a self-propelled model. And only the results obtained in these tests will provide opportunities for verifying preliminary design calculations. It should be stressed, however, that developing design procedures for this type of propellers will require additional optimising calculations, with further experimental verification. And this should be the subject of separate investigations.

CONCLUSIONS

Preliminary investigations of three basic elements composing the ring thruster, i.e. ferrofluid seals, electromagnetic bearing, and ring propeller indicate that manufacturing this ring thruster is advisable. However, prior to the manufacturing of the operating prototype, optimisation studies are to be done. The preliminary examination has been already performed, thanks to which directions of further modifications of particular centres are known.

The machine durability problem focuses on the loss of tightness. This is the most possible failure which may happen during long-lasting use of the ring thruster. During the last test, as a result of high dynamics of motion on the interface between the sealing phase (magnetic liquid) and the sealed phase (usable water under pressure), the layer was destroyed after 64 hours, which well corresponds to the results of investigations of he magnetic liquid alone recorded during earlier tests. However, this time is rather inconclusive, and further tests are in progress in 2006. It is noteworthy that the reported tests were performed in the conditions of direct action of the entire volume of the liquid on the examined seal, while in known descriptions of technical solutions and in research works hybrid sealing systems are often used, such as for instance a double system consisting of a preliminary front-type seal and a final magnetic liquid seal, to secure absolute tightness. The task of the preliminary seal in this case is to limit the volume of the liquid which comes into contact with the magnetic liquid in the final seal. The results of investigations are so promising that they justify continuation of research activities oriented on examining magnetic liquid seals designed to work in the liquid environment.

Independently of design solutions (including the motor, bearings, lubrication, seals) worked out for the presented

MOST WIEDZY Downloaded from mostwiedzy.pl

propulsion system, more comprehensive model investigations should be carried out to determine relevant empirical corrections which would allow these types of drives to be designed in a way similar to that followed when designing Kort nozzle propellers.

High efficiency and dynamics of electric drive systems used on watercraft resulted in their increased proportion in total number of propulsion applications. Thanks to the development of mechatronics, electrotechnics and hydrodynamics, the time has come when earlier solutions in this area can be put in practice. Among water propulsion systems, especially attractive properties are represented by ring-type propellers, but only with electromagnetic bearings. A characteristic feature of the motor, being an extension of a classical synchronous motor with permanent magnets, is that the ring with propeller blades is a part of the rotor. Dimensions of the nozzle in which the winding is mounted do not exceed dimensions resulting from the optimum geometry of the Kort nozzle propeller for the assumed power. As recently as a few years ago the development in the field of magnetic materials, ferrofluid liquids, non-linear control techniques and hydrodynamics reached a level providing opportunities for effective introduction of ring-type propulsion systems on a large scale. A drive which is expected to be especially promising in the nearest future is the ring thruster, used as a manoeuvring drive, and the main drive on smaller watercraft. The experience gained in designing ring thrusters with magnetic bearings has provides opportunities for manufacturing an efficiently working prototype and offering it on the market of water propulsion systems.

Ring propulsion systems with classical bearings are slowly becoming more and more popular, but still their efficiency is lower than 20% due to relatively high drag. A quantitative break-through in the field of efficiency improvement can be only secured by the use of magnetic bearings.

An additional advantage of the ring thruster is its ability to switch to turbine operation, in which it can be used as electric power generator. In numerous situation this property makes it possible to recover energy.

NOMENCLATURE

B – magnetic induction
δ – seal gap height
γ – conical inclination angle

BIBLOGRAPHY

1. Gosiewski Z., Falkowski K.: *Multi-function electromagnetic bearings* (in Polish). Institute of Aviation Scientific Library series, Vol. 19/2003
2. Falkowski K., Matuszewski L.: *Ring Thruster With Magnetic Bearings*, International Conference OCEANS 2003, San Diego, USA, 2003.
3. Jussi K. Lahteenmmaki, Erkki J. Lantto: *Optimisation of the conical angle of cone –shaped active magnetic bearings*, Sixth International Symposium on Magnetic Bearings, pp. 224-233, USA, 1998.
4. Koronowicz T., Szantyr J., Bugalski T.: *Theoretical model for determination the pressure field resulting from hull flow and operation of the marine propeller*. Polish Maritime Research, no 3 (13) September 1997 Vol. 4

Photo : Arkadiusz Łabuć

MOST WIEDZY Downloaded from mostwiedzy.pl