Zeszyty Naukowe Wydziału Elektrotechniki i Automatyki Politechniki Gdańskiej Nr 46

XXV Seminarium

ZASTOSOWANIE KOMPUTERÓW W NAUCE I TECHNICE 2015

Oddział Gdański PTETiS

DIFFRACTION PHASE MICROSCOPY FOR OBSERVATION ON RED BLOOD CELLS FLUCTUATION

Sylwia BABICZ-KIEWLICZ[1], Barbara STAWARZ-GRACZYK[2], Paweł WIERZBA[3], Adam MAZIKOWSKI[4]

1. Gdańsk University of Technology, Faculty of Electronics, Telecommunication and Informatics, tel.: +48 58 347 1886 e-mail: sylwia.babicz@eti.pg.gda.pl
2. Gdańsk University of Technology, Faculty of Electronics, Telecommunication and Informatics, tel.: +48 58 348 6368 e-mail: bstawarz@eti.pg.gda.pl
3. Gdańsk University of Technology, Faculty of Electronics, Telecommunication and Informatics, tel.: +48 58 347 2017 e-mail: pwierzba@eti.pg.gda.pl
4. Gdańsk University of Technology, Faculty of Electronics, Telecommunication and Informatics, tel.: +48 58 347 2017 e-mail: adamazik@eti.pg.gda.pl

Abstract: Nowadays there is quite huge need for more and more precise and effective fast diagnostics methods in hematology diseases. One of the most important blood components are erythrocytes – RBCs (Red Blood Cells). Due to their size they are easy to observe using microscopy. It is commonly known that the shape and lifetime of RBCs allows for early disease identification. Authors present special measurement system for RBCs fluctuations observation using diffraction phase microscopy which is also described in theory.

Keywords: diffraction phase microscopy, RBC, medical diagnostics.

1. INTRODUCTION

Innovative methods of medical diagnosis and treatment are one of the key themes of the contemporary research. Early diagnosis and subsequent effective treatment are important for preserving patients life expectancy and their quality of life as well as for keeping the healthcare costs acceptable. Just because the need of rapid diagnosis the blood test method is often used. This is for the reason that the blood is the primary carrier of information about the health condition of the patient. Nowadays there is a need to find more and more precise methods for hematology disease fast diagnostics.

RBCs (red blood cells) are one of the most important blood components. Recent results suggest that RBCs observation can give us very important information about different diseases [1, 2]. The two most important properties of these cells that change during cell's lifetime are its size and shape. The radius of RBC is close to 4 µm and their thickness is about 1-2 µm [3]. The normal, healthy erythrocyte is circular and bi-concave in the middle of the cell. It is commonly known that an analysis of the shape and size of the RBCs allows for early identification of some diseases. For example malaria [1] or different kinds of anemia connected with non-proper production of erythrocytes: sickle cell, deficient, hypoplastic, dysplastic and diseases caused by short lifetime of RBCs: congenital hemolytic syndrome or acquired hemolytic syndrome [4, 5]. The RBCs with different diseases are presented in Fig. 1.

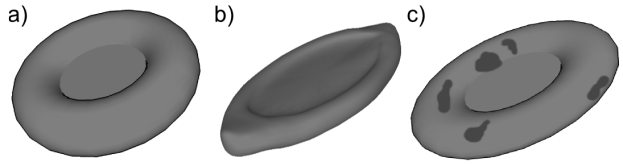

Fig. 1. RBC: a) healthy one, b) with anemia, c) with malaria

Moreover, RBCs exhibit cell membrane fluctuations (CMF) under some physiological conditions. The phenomena is also referred as RBCs flickering. Unfortunately, the nature of the fluctuations is still not fully understood. The comprehension of the phenomena may provide an important information about the physiological state of the cells. The two origins of the flickering are considered: thermal motion [6, 7] and metabolic activity of the cells.

Due to their size RBCs are best observed using light microscopy. It is nowadays one of the most important tools in medicine. Although it is known from seventeenth century it's still expanding and allows to improve many methods in healthcare. The resolution and contrast are two main properties of the microscopy image [9-11].

2. MEASUREMENT SYSTEM

Since red blood cells do not have organelles and nuclei. They can be considered as optically homogenous and transparent objects which modify only the phase of the light propagating from them. From the microscopy point of view, RBCs can be regarded as phase objects, requiring the use of advanced microscopy techniques such as phase contrast microscopy or microinterferometry. Described in literature [12-15] similar measurement system enables quantifying the structure and size of RBC. The system is a combination of phase contrast (PC) and differential interference contrast DIC) microscopy. Using these two techniques it is possible to encode in the phase into intensity and obtain quantitative

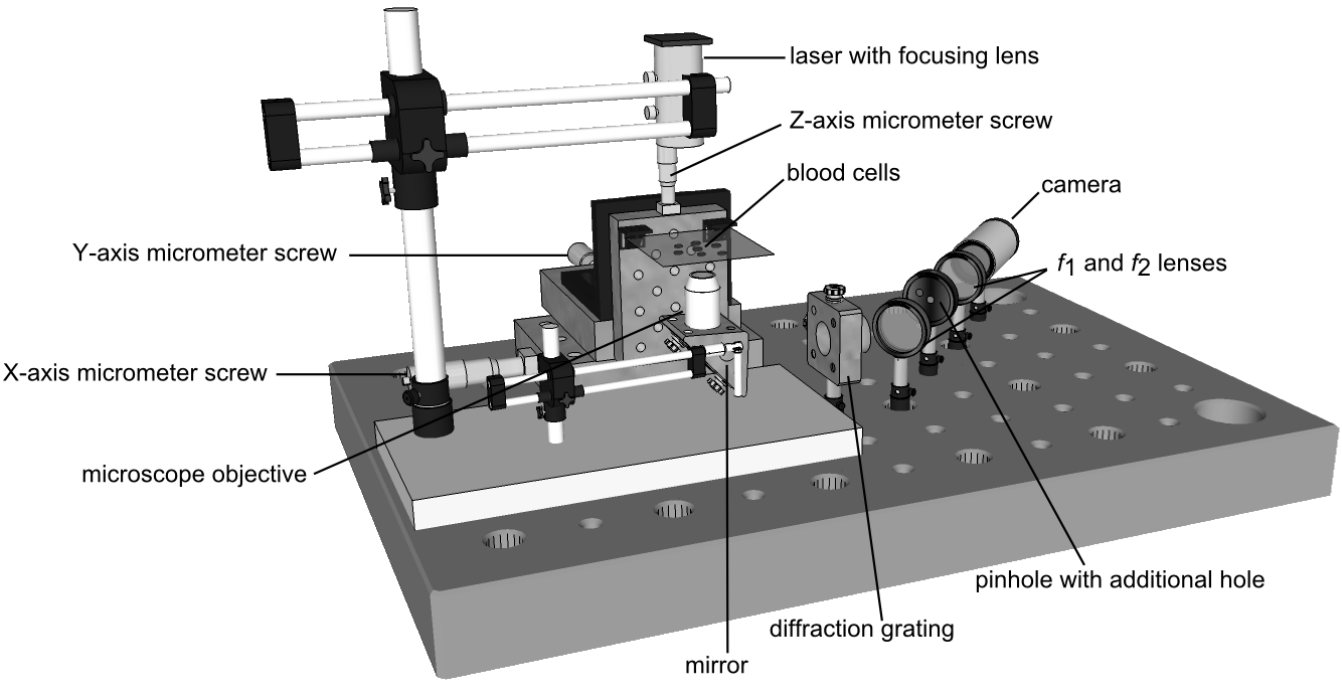

Fig. 2. The view of DPM model

information about the shape and size of the investigated RBCs. Popescu et. al created diffraction phase microscope (DPM) to provide detailed information about single cell structure and dynamics. Therefore, the information about phase can be transformed into thickness and analysed in time domain.

The proposed measurement system uses an interferometer based on a diffraction grating and Fourier optics methods to obtain the phase contrast image. It's based on simple and commonly known elements (Fig. 2): laser, lenses, diffraction grating and pinhole. The examined object is illuminated by the second harmonic radiation of a Nd: YAG green (λ = 532 nm) laser with lens focusing the light beam. The image is created at diffraction grating (with 300 of cuts per 1 mm) after passing through the microscope objective, magnifying forty times. The two lenses system also known as 4*f* optical processor, performs spatial filtering of the reference beam and provides additional magnification (f_1 = 125 mm, f_2 = 31.8 mm, $f_2 / f_1 \approx 3.93$). In the focal length between both lenses, the pinhole with additional hole was placed. The zeroth-order beam is low-pass filtered. The first-order beam is passed by additional hole in pinhole. The operation isolates the two orders beams and align their intensity. To properly pass both orders by the 4*f* system with modified pinhole, it is necessary to angle the whole equipment after the diffraction grating. Such operation eliminate aberrations at the edges of the lens which could have disturbed first-order beam. The final image is combined from two orders at the output of 4*f* system. The interferogram is generated at the CCD plane camera (model Flea3 FL3-U3-13S2M by PointGrey). The optic path is shown in Fig. 3.

3. THEORY

The unusual characteristic of RBC enables treating them as optical homogenous sample. It is caused by the lack of organelles and nuclei and uniform structure. Despite popular belief, hemoglobin only slightly entertains a single cell. So that, the light passes through RBC but is shifted in phase (delayed). The filtered zeroth-order beam with only constant component interferes with the first-order beam carrying the phase shift information. As a result, the interferometer DPM image is created in CCD plane of camera (Fig. 4). The distance and width of the black-white depend on the wavelength of light. The deflection of strips is associated with object thickness – the higher deflection means the thicker object. So that, by observing and analysing the deflections of the strips, we can estimate the changing in RBC thickness flickering. Moreover, the position of the beginning of the deflection determines the edge of the examined object. Therefore, the DPM image analysis enables the RBC fluctuations both in thickness and in the position.

4. THE SYSTEM ISSUES

The proper functionality of the system is closely related with an accurate and precise adjusting the optical components. The task is very difficult because the lenses are thick and estimating their focal lengths is problematic. Moreover, long wavelength path makes challenging the proper setting of the elements, especially the pinhole. The correct pinholes position determines the accurate zeroth-order low-pass filtering, because of focus obtaining of the laser beam in the central hole with very small diameter (35 μm).

Another problem can occur even if all elements are properly placed – the quality and focusing of the laser beam. Incorrect selection of the laser quality disturbs the black-white stripes, which edges are ragged. That makes the image useless (Fig. 5).

MOST WIEDZY Downloaded from mostwiedzy.pl

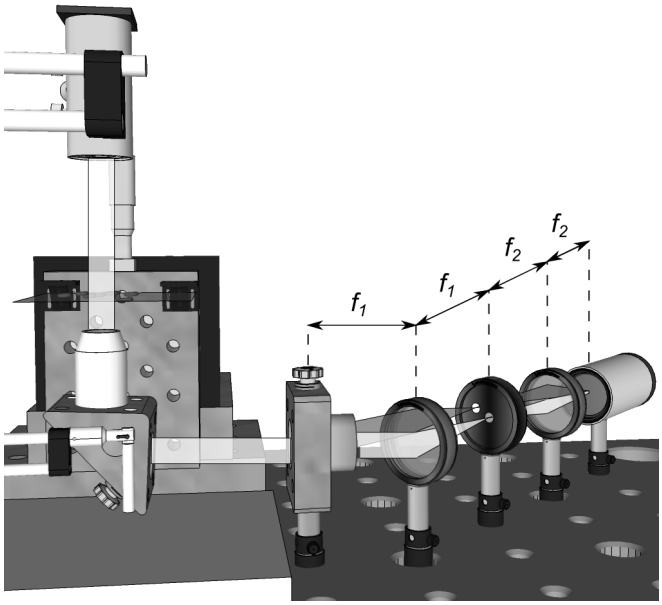

Fig. 3. The optic path in DPM: the laser beam (marked as white) goes through the RBC and is reflected by a mirror; the zeroth- (marked as white beam) and first-order (marked as grey beam) beams pass 4*f* system to camera

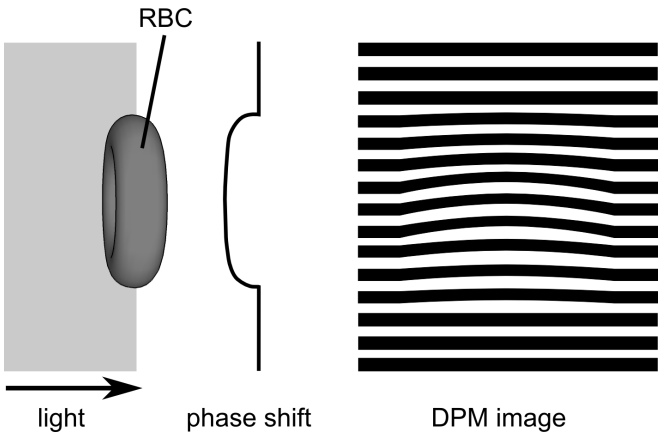

Fig. 4. The scheme of DPM image creating

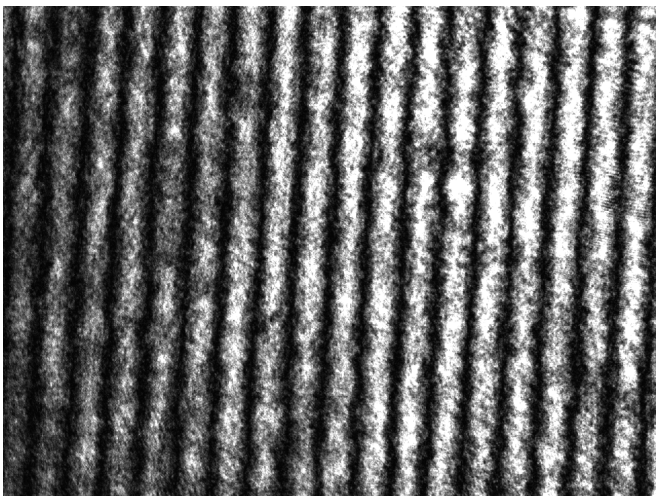

Fig. 5. Blurred interference strips

Moreover, in the idea the laser beam is a collimated light. Practically, the laser light may not be collimated or, even if it is, the power of small beam of light passing the single RBC to microscope objective can have insufficient power. Consequently, the resulting image will have to small contrast.

5. CONCLUSIONS

An experimental system using a microscope objective followed by diffraction grating-based microinterferometer was built and tested. It's magnification, being about 160 times, is sufficient for investigation of red blood cells.

The micro interferometer, using Fourier optics filtering methods, is difficult to align and requires tight mounting tolerances, reducing is usability in the planed research.

Further research will be aimed at evaluating alternative setups, especially those using birefringent prisms, such as Wollaston or Nomarski prisms. Effective methods for converting the interferogram into information about the red blood cells will be developed and optimized as well.

6. REFERENCES

1. Callan-Jones A., Albarran Arriagada O. E., Massiera G., Lorman V., Abkarian M.: Red Blood Cell Membrane Dynamics during Malaria Parasite Egress, Biophysical Journal, vol. 103, December 2012, pp. 2475–2483.
2. Higgins J. M., Mahadevan L.: Physiological and pathological population dynamics of circulating human red blood cells, Proceedings of the National Academy of Science of the United States of America, vol. 107 no. 47, November 2010, pp. 20587–20592.
3. Higgins J. M., Eddington D. T., Bhatia S. N., Mahadevan L.: Statistical Dynamics of Flowing Red Blood Cells by Morphological Image Processing. PLoS Comput Biol 5(2): e1000288. 2009.
4. Aulakh R., Sohi I., Singh T., Kakkar N.: Red cell distribution width (RDW) in the diagnosis of iron deficiency with microcytic hypochromic anemia, The Indian Journal of Pediatrics, March 2009, vol. 76, issue 3, pp 265-268.
5. Rappaz B., Barbul A., Hoffmann A., Boss D., Korenstein R., Depeursinge C., Magistretti P. J., Marquet P.: Spatial analysis of erythrocyte membrane fluctuations by digital holographic microscopy, Blood Cells, Molecules, and Diseases, vol. 42 np.3, 2009, pp. 228-232.
6. Brochard F., Lennon J.F.: Frequency spectrum of the flicker phenomenon in erythrocytes, Journal de Physique, vol. 36 no. 11, 1975, pp. 1035-1047.
7. Strey H., Peterson M., Sackmann E.: Measurement of erythrocyte membrane elasticity by flicker eigenmode decomposition, Biophysical Journal, vol. 69 no. 2, 1995, pp. 478-488.
8. Buchanan G. R., DeBaun M. R., Quinn C. T., Steinberg M. H.: Sickle Cell Disease, ASH Education Book January 1, 2004 vol. 2004 no. 1, pp. 35-47.
9. Popescu G.: Quantitative Phase Imaging of cells and Tissues, McGraw Hill Proffesional, 2011.
10. Stephens D. J., Allan V. J.: Light microscopy techniques for live cell imaging, Science 300.5616, 2003, pp. 82-86.
11. Pluta M.: Advanced Light Microscopy, vol. 3, Measuring Techniques. PWN, Elsevier, 1993.

MOST WIEDZY Downloaded from mostwiedzy.pl

12. Popescu G., Ikeda T., Dasari R. R., Feld M. S.: Diffraction phase microscopy for quantifying cell structure and dynamics, Optics Letters, vol. 31 no. 6, 2006, pp. 775-777.
13. Park Y., Popescu G., Badizadegan K., Dasari R. R., Feld M. S.: Diffraction phase and fluorescence microscopy, Optics Express, vol. 14 no. 18, 2006, pp. 8263-8268.
14. Bhaduri B., Pham H., Mir M., Popescu G.: Diffraction phase microscopy with white light, Optics Letters, 2012, vol. 37 no. 6, pp. 1094-1096.
15. Martinez-Torres C., Berguiga L., Streppa L., Boyer-Provera E., Schaeffer L., Elezgaray J., Arneodo A., Argoul, F.: Diffraction phase microscopy: retrieving phase contours on living cells with a wavelet-based space-scale analysis, Journal of Biomedical Optics, 2014, vol. 19 no. 3, pp. 036007.

UKŁAD DO OBSERWACJI FLUKTUACJI ERYTROCYTÓW Z WYKORZYSTANIEM DYFRAKCYJNEGO MIKROSKOPU FAZOWEGO

Istnieje zapotrzebowanie na coraz bardziej precyzyjne i bardziej efektywne metody szybkiej diagnostyki w kierunku chorób hematologicznych. Jednym z głównych składników krwi są erytrocyty (RBC –Red Blood Cells), które z uwagi na swój rozmiar mogą być łatwo obserwowalne. Powszechnie wiadomo, że kształt i długość życia tych komórek pozwala na wczesną identyfikację stanów chorobowych. Najnowsze wyniki badań świadczą też, że oprócz tych cech istotną informację zawiera przebieg fluktuacyjny erytrocytów. Autorzy proponują układ do obserwacji fluktuacji czerwonych komórek krwi z wykorzystaniem dyfrakcyjnego mikroskopu fazowego.

Słowa kluczowe: dyfrakcyjny mikroskop fazowy, RBC, diagnostyka medyczna.

MOST WIEDZY Downloaded from mostwiedzy.pl