Economical analysis of selected variants of power plant for inland waterways passenger ship intended for operating on Berlin - Kaliningrad route

Damian Bocheński, D.Sc., Eng.
Gdańsk University of Technology

ABSTRACT

This paper contains an economical analysis of three selected variants of power plant for inland waterways passenger ship intended for operating on Berlin-Kaliningrad route. Purchase cost of elements of the ship's energy system and fuel consumption cost were assumed as the assessment criterion for the analyzed variants of the ship's power plant. The economical indices : Average Annual Cost (AAC) and Net Present Value (NPV) were taken into consideration.

Keywords : Inland waterways passenger ship, ship power plant, ship propulsion systems

INTRODUCTION

Choice of the most favourable solution of power plant of inland waterways passenger ship is a complex issue, like in the case of sea-going passenger ships. Number of possible power plant variants which satisfy ship's technical requirements is large as a rule. In selecting appropriate technical solutions of the whole ship [7], its power plant [1] or only its propulsion system [8] various economical criteria are often and often used. The indices such as : Average Annual Cost (AAC) and Net Present Value (NPV) are most often applied.

This paper presents economical analysis of three design variants of power plant of an inland waterways passenger ship intended for operating in inland waters of Germany, Poland and Russia, mainly on Berlin-Kaliningrad route.

CHARACTERISTICS OF THE CONSIDERED PASSENGER SHIP

The passenger ship in question is designed as a two-segment unit consisted of a pusher and barge. Such system is conditioned by characteristics of the waterway on Berlin-Kaliningrad route. Along the route are located 24 locks of the dimensions which make it possible to accommodate ships not longer than 55 m and not broader than 9 m [11].

In the initial design phases the following preliminary design assumptions were adopted [9,10] :

- The main service route of the ship : Berlin–Kostrzyń––Bydgoszcz–(Toruń)–Malbork–Elbląg–Zalew Wiślany––Kaliningrad
- Two-segment ship consisted of a pusher (i.e. the propulsion and energy supply segment on which, apart from the power plant, also crew and recreation accommodations, restaurant and coffee-bar will be located) and a barge (i.e. the passenger segment containing Lux-class cabins)
- Tourist voyage cycle : 14 days
- Number of passengers and crew members: 80 – 100 persons
- Ship's speed: 15 km/h (in deep waters)
- Main dimensions of the segments :

Overall length	L_c = 55.00 m
Length b.p.	L_{pp} = 54.00 m (pusher)
	L_{pp} = 53.30 m (barge)
Breadth	B = 9.00 m
Design draught	T = 1.00 m
Length of the push-train	L = 110.00 m

- Propulsion system of two nozzle - ducted fixed-pitch propellers (optionally : two azimuthing nozzle - ducted fixed-pitch propellers)
- An air-conditioning system for passenger accommodations and a high-level equipment of gastronomy compartments (restaurant, coffee bar etc) is provided to ensure a high-level comfort on the ship.

It was assumed that the ship's service is seasonal, namely for about 6 – 7 months yearly. Voyages of the whole push-train on Berlin-Kaliningrad route is the main service task of the ship. Another possible mode of operation is connected with day-long trips of the pusher alone and the use of the barge as a floating hotel lying along a quay.

DEMAND OF ENERGY FOR SHIP MAIN PROPULSION AND AUXILIARY CONSUMERS

Solution of main propulsion system and output power of main engines of inland waterways passenger ship is associated with a waterway on which it has to operate, its size and speed. Speed of a designed ship will be highly dependent on its route. According to [11] the maximum speed values of the ship in question will be as follows :

- 15 km/h - in deep waters (control-delivery trials)
- 10 km/h - in shallow and extremely shallow waters
- 6.5 km/h - in canals and canalized rivers.

In the initial design phases it was assumed that for the designed ship the system with two fixed and ducted propellers (or optionally that of two azimuthing fixed and ducted propellers)

will be the best solution of propulsion system. During preliminary calculations [6,7] the following quantities were determined : the power at the propeller cone equal to 2×150 kW, and the nominal rotational speed of the propellers equal to 600 rpm.

The electric power demand for auxiliary purposes was determined in the publications [2,6] whose results are presented in Tab.1.

Tab.1. Mean electric power demand in three basic service states of the ship [kW]

Ship's configuration	Moving	Manoeuvres	Staying in port
Pusher + barge	145 – 165*)	160 – 200*)	110 – 140**)
Pusher	85 – 100	100 – 120	55 – 75**)
Barge	-	-	50 – 70**)

*) – work of the thruster is taken into account
**) – with passengers on board

On the basis of Tab.1 one can determined the total rated power of the electric power plant (operating for auxiliary purposes). The total power amounts to about 250÷300 kW at the assumed diversity factor value of 0.7÷0.8.

POWER PLANT VARIANTS AND ASSESSMENT OF PURCHASE COSTS

Out of a few feasible design variants of power plant for the passenger ship in question three most probable systems characterized by the highest efficiency were selected for comparative analysis [5,6], namely :

- ★ the power plant with two main combustion engines driving two fixed propellers through reversing-reduction gears (one engine drives one propeller); the electric power plant is consisted of 2 or 3 electric generating sets
- ★ the power plant with four main combustion engines driving two propellers trough two reversing-reduction gears (two engines drives one propeller); the electric power plant is consisted of 2 or 3 electric generating sets
- ★ the combustion electric power plant consisted of 2 or 3 main electric generating sets and 2 or 3 smaller auxiliary electric generating sets, two propellers driven by two identical drive systems consisted of one AC (alternate current) electric motor of controlled speed (by using a frequency converter) and /or a reduction gear (depending on which kind of electric motor is applied), each.

In the case of two systems with combustion-engine drive of propellers, size of the main propulsion engines was determined in the following way. For the assumed power at the cone of the propellers (2×150 kW) the rated output power of the installed combustion engines depends on the power transmission system efficiency as well as on the service load factor assumed at given propeller design parameters [2,5]. Preliminarily assuming the shaft-line efficiency $\eta_{lw} = 0.98$ and the reversing-reduction gear efficiency $\eta_{prz} = 0.96 – 0.97$ one can obtain the power transmission system efficiency of the value from 0.94 to 0.95, counted between the coupling of engine (-s) and the cone of propeller.

In design practice the service load factor of the main propulsion combustion engine serves as a basis for determining nominal parameters of the engine. Full service power value of the engine, assumed for ship propulsion, is lower than that rated (contractual). A problem is associated with expected changes in propeller characteristics (propeller curve) during ship service, against its course in the conditions determined by the design assumptions. For sea-going cargo ships the statistically obtained value of the service load factor of main propulsion combustion engines is contained within the interval of 85÷90% N_{SG}^{nom} (rated power of main engine). It is known that for service conditions on North Atlantic the design load factors of main combustion engines are sometimes assumed on the level of 75÷80% N_{SG}^{nom} [2,6].

For inland waterways passenger ship even a lower value of load factor of its main propulsion combustion engines should be assumed for the reason of the specific waterway's features such as a low depth, changeable midstream and many meanders, in presence of which highly variable operational conditions occur, making the characteristics of the fixed-propeller propulsion system changing, that impacts engine load in a very unfavourable way. It leads to decreasing engine's service rotational speed with all negative consequences resulting from worsening the supercharging process. Moreover in the case of ship's grounding the large power margin of its main propulsion engines makes the ship's refloating easier.

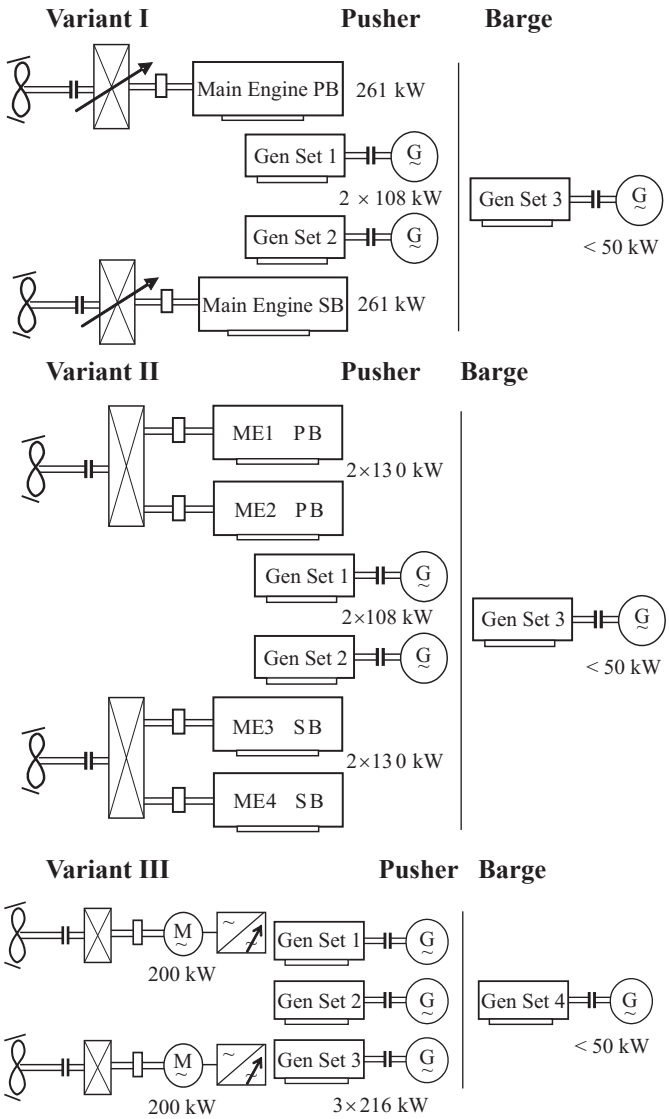

Fig.1. *Schematic diagram of three selected design variants of power plant for the designed passenger ship.*
ME *– main engine,* ***PB*** *– port board,* ***SB*** *- starboard .*

On the basis of the performed analysis of operational conditions of the main combustion engines driving fixed propellers installed on the designed passenger ship [2,6] it seems reasonable to assume the load factor of the main engines equal to about 70% N_{SG}^{nom}. Hence for the assumed power at the cone of propellers of 2×(150÷170) kW two combustion engines of the rated power of about (230÷270) kW each, or four combustion engines of the power of about (115÷135) kW each, should be chosen.

MOST WIEDZY Downloaded from mostwiedzy.pl

In the case of the combustion-electric propulsion system, values of the output power of electric motors can be smaller for the reason of more favourable working characteristics of the motors at decreased rotational speeds. According to [2], the output power of the main drive electric motors should amount to about 190 ÷ 210 kW.

As the main and auxiliary engines for the ship in question Caterpillar and Volvo Penta combustion engines were selected. The choice was preceded by the analysis presented in [2,3].

For the comparative analysis the engines of only one producer were taken into account as the prices of main engines and electric generating sets of similar power, offered by both the preferred firms (i.e. Caterpillar and Volvo Penta), are close to each other, as well as also their specific fuel oil consumption characteristics are very similar. Final choice of a producer may be done in a further design stage after possible contact with ship owner. For the purposes of this analysis Volvo Penta combustion engines were assumed. In the case of the combustion--electric power plant electric motors and frequency converters should be taken into account additionally. To this end, EMIT electric motors and Danfoss frequency converters [2,3] were finally selected. The following variants of power plant were assumed (Fig.1) :

- **Variant I** : two D9MH Volvo Penta main combustion engines of 261 kW output power driving propellers through reversing – reduction gears (of 1:3 reduction ratio), two larger, D7AT Volvo Penta, electric generating sets of 108 kW output power, as well as one smaller electric generating set of less than 50 kW output power (installed on the barge)
- **Variant II** : four D7A TA Volvo Penta main combustion engines of 130 kW output power each, driving two propellers through reversing – reduction gears, two larger, D7A T Volvo Penta, electric generating sets of 108 kW output power, as well as one smaller electric generating set of less than 50 kW output power (installed on the barge)
- **Variant III** : three D9MG Volvo Penta main electric generating sets of 216 kW output power each, as well as one smaller electric generating set of less than 50 kW output power (installed on the barge), two Sg 355 S2 EMIT electric motors (of n = 1450 rpm) with VLT Danfoss frequency converters, driving propellers through reduction gears of 1:2,42 reduction ratio.

In Tab.2 are presented purchase costs of the elements of three design variants of power plant for the passenger ship in question. Only purchase costs of main engines, electric generating sets and elements of power transmission system of main energy consumers, were taken into account. The data were achieved from the offers submitted by the producers of the elements of energy supply – propulsion system.

FUEL OIL CONSUMPTION COSTS

In accordance with the adopted assumptions, the designed inland waterways passenger ship will operate mainly on Berlin--Kaliningrad route (in the configuration "pusher+barge"), and also autonomous day-long excursion trips of the pusher alone will be carried out [6].

Time structure of the particular service states of the ship on the route Berlin-Kaliningrad, based on the assumption that one tourist voyage cycle will last 14 days (about 330 h), and determined in [5], is presented in the table below :

Service state	Duration time	
	Hours	%
Sailing in shallow waters	75 - 85	23 - 26
Sailing along canals	55 - 65	17 - 20
Manoeuvres, locking operations	30	9
Stays in ports	150 - 170	45 - 52
Total	330	100

For the day-long trip, 9 h duration time (including 6 h for cruising and 3 h for port staying) was assumed [5].

In [5] were predicted load characteristics of main engines and electric generating sets during the voyage on Berlin-Kaliningrad route as well as during the day-long trip. The relevant results are given in Tab.3.

Tab. 3. *Predicted load distribution parameters of the main and auxiliary engines installed on the designed ship .*

Variants of power plant	Voyage on Berlin--Kaliningrad route				Day-long trip			
	N^{av}_{ME}	σ_{ME}	N^{av}_{GS}	σ_{GS}	N^{av}_{ME}	σ_{ME}	N^{av}_{GS}	σ_{GS}
I	174.8	73.4	129.7	36.9	110.0	41.4	88.2	22.8
II	174.8	73.4	129.7	36.9	110.0	41.4	88.2	22.8
III	-	-	235.9	130.9	-	-	163.1	89.5

N^{av}_{ME} – mean load of main engine
σ_{ME} – standard deviation of load distribution of main engine
N^{av}_{GS} – mean load of main electric generating sets
σ_{GS} – standard deviation of load distribution of main electric generating sets

In calculating fuel oil amount consumed by the ship's power plant (in various variants) the use was made of :

- the predicted load distributions for main and auxiliary engines, presented in Tab.3
- the fuel oil consumption characteristics in function of engine load fact (producer catalogue data [12])
- the calculation method given in [4].

Tab. 2. *Comparison of purchase costs of elements of three variants of power plant for the considered passenger ship .*

Elements of Energy System	Power plant design variants					
	Variant I		Variant II		Variant III	
	Specification	Price (×1000 Euro)	Specification	Price (×1000 Euro)	Specification	Price (×1000 Euro)
Main engines, elastic couplings, reversing-reduction gears	2×261 kW	142	4×130 kW	190	-	-
Main electric generating sets	-	-	-	-	3×216 kW	231
Auxiliary electric generating sets	2×108 kW 1×50 kW	109	2×108 kW 1×50 kW	109	1×50 kW	26
Electric drive of propellers: electric motors, reduction gears, frequency converters	-	-	-	-	2×200 kW	63
Total cost		251		299		320

MOST WIEDZY Downloaded from mostwiedzy.pl

In Tab. 4 the fuel oil consumption for one ship's voyage on the route Berlin – Kaliningrad (in the configuration „pusher + barge") and for one day-long trip (of the pusher alone) are presented. In calculating the values of fuel oil consumed by electric generating sets it was assumed that a successive set would be switched on when 85% load level is exceeded by the currently operating set (-s) [5].

Tab. 4. *Fuel oil consumption values determined for three variants of the power plant for the considered passenger ship, [kg] .*

Design variants of power plant	Fuel oil consumption Berlin – Kaliningrad voyage			Fuel oil consumption Day-long trip		
	ME	EGS	Σ	ME	EGS	Σ
I	7085	9295	16380	168	171	339
II	7020	9095	16115	165	176	341
III			15740*)			300*)

ME – main engine
EGS – electric generating sets
*) – total fuel oil consumption by all electric generating sets

It was assumed that both main engines and electric generating sets will work on the Marine Gas Oil (MGO). Prices of diesel oils of all kinds have dramatically increased lately. For two last years they increased 2.5 times, e.g. in December 2003 purchase cost of 1 t of MGO amounted to 280 $ but it was already within 620 ÷ 670 $/t interval in September 2005. On 10 November 2005 1 t of MGO costed 574 ÷ 575 $/t (489 ÷ 490 Euro/t) in Gdańsk port [6]. Fear is felt that in the nearest years fuel oil prices will be further increasing. According to some analysts, during the nearest years the rise of prices even by 100 % may be expected.

For the calculations three prices of the MGO were assumed and on this basis the fuel oil consumption costs to be incurred during one voyage on Berlin – Kaliningrad route as well as during one day-long trip (about 9 h), were calculated. The relevant results are given in Tab.5.

Tab. 5. *Fuel oil consumption costs to be incurred during one voyage on Berlin – Kaliningrad route as well as during one day-long trip, [Euro] .*

Design variants of power plant	Assumed price					
	500 Euro/t		750 Euro/t		1000 Euro/t	
	Berlin-Kaliningrad voyage	Day-long trip	Berlin-Kaliningrad voyage	Day-long trip	Berlin-Kaliningrad voyage	Day-long trip
I	8190	169,5	12285	254	16380	339
II	8057.5	170,5	12086	256	16115	341
III	7870	150	11805	225	15740	300

ECONOMICAL COMPARISON OF DESIGN VARIANTS OF POWER PLANT

The comparative analysis of the power plant design variants was performed with the use of the **AAC** (Average Annual Cost) and **NPV** (Net Present Value) economical indices.

The AAC index takes into account purchase costs of main engines, electric generating sets and other elements of the energy system (gears, couplings, electric motors of main consumers, frequency converters etc) as well as costs of operation for its assumed duration time. Only fuel oil cost (which amounts to about 80 % of total costs of power plant operation) was taken into consideration because of a relatively low share of cost of lubricating oils, spare parts and repair work in the total operational costs.

The Average Annual Cost (AAC) expressed in [10^6 Euro/year] is determined by the following formulae :

$$AAC = \frac{PW}{X} = \frac{I}{X} + K \quad [10^6 \text{ Euro/year}] \qquad (1)$$

$$X = \begin{cases} q \times \dfrac{q^L - 1}{L^{q-1}} & \text{for } q \neq 1 \\ L & \text{for } q = 1 \end{cases} \quad [\text{years}] \qquad (2)$$

$$q = \frac{1+s}{1+r} \qquad (3)$$

where :

r – rate of profit (discount rate)
s – rate of fuel cost increase
PW – value of total costs currently incurred
I – purchase cost of main engines, electric generating sets and other elements of energy system
K – annual purchase cost of fuel oil
L – years.

The most favourable solution is that having the smallest value of AAC index.

Presently, the NPV index is very often applied in comparing various solutions of propulsion system or entire energy system of a ship. In this case the differences in total outlays for an alternative solution and for basic one, are analyzed. Usually, out of those analyzed, the less expensive solution is assumed basic one.

The NPV index is determined by the formula :

$$NPV = \Delta K \times X - \Delta I \qquad (4)$$

where :

ΔI – difference between purchase cost of a given variant of energy system and that of the least expensive variant assumed basic one
ΔK – difference between yearly fuel oil cost for the energy system variant assumed basic one and that for a given energy system variant.

One calculated values of the economical indices **AAC** and **NPV** making use of the data given in Tab.2 and 5 as well as the formulae (1),(2),(3) and (4).

As the ship has to operate for 6 ÷7 months per year, hence 10 voyages of the ship (pusher + barge) on Berlin – Kaliningrad route and 30 day-long trips (pusher alone) can be assumed.

The calculation results of AAC and NPV index values for the compared design variants of the passenger ship's power plant are presented in Tab. 6 and Fig. 2, 3 and 4.

For the calculations included in Tab.6 the constant value **r** = 5 % and ship's service time of 10 years were assumed, however values of the fuel cost increase rate were assumed changeable.

Tab. 6. *Economical indices AAC and NPV for three design variants of power plant of the considered passenger ship, and the assumed 10-year service time, [10^3 Euro] .*

Economical indices \ Design variant		I	II	III
AAC	s = 5 %	112.1	117.5	115.2
	s = 15 %	95.0	95.9	93.5
	s = 25 %	91.5	91.4	84.7
NPV	s = 5 %	0	-54.05	-31.15
	s = 15 %	0	-26.6	48.9
	s = 25 %	0	4.8	140.7

MOST WIEDZY Downloaded from mostwiedzy.pl

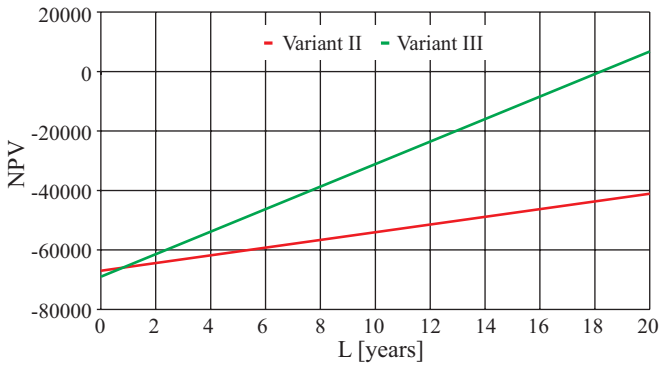

Fig. 2. *NPV index in function of ship service time L (for s = 5%) .*

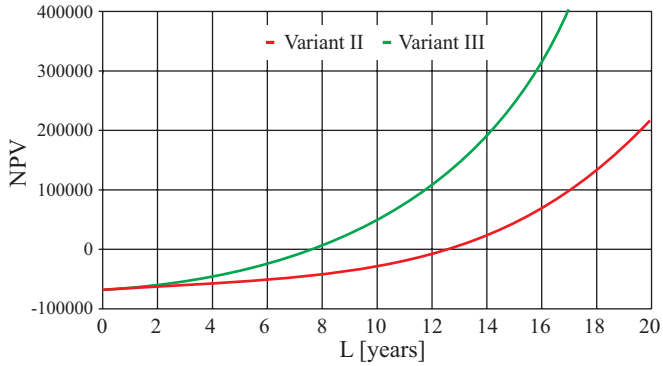

Fig. 3. *NPV index in function of ship service time L (for s = 15%) .*

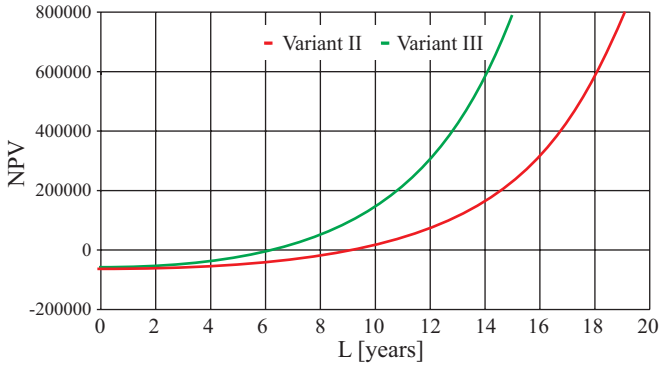

Fig. 4. *NPV index in function of ship service time L (for s = 25%) .*

It should be observed that assumed values of **r** and **s** and current fuel oil price can seriously influence values of the economical indices in question. For the fuel oil price of about 500 Euro/t and the fuel price increase rate of **s** = 5%, variant I is the best solution. The increased investment outlays in the case of variant III would be returned as late as after 19 years, and those of variant II after more than 20 years. The situation will change when fuel price increasing is faster. And, at the fuel price increase rate **s** = 15%, return of the increased investment outlays for variant III would be realized after 8 years and for variant II after 13 years of service. At the higher rate of fuel price increase (**s** = 25%) the return of the increased investment outlays for variant III would be effected after 6 years, and for variant II after 10 years of service.

It can be also observed that at a stable but moderate increase of fuel price, variant I will be really the best solution. However, if the prices increase like in the last years then it will be rational to take variant III into considerations.

SUMMARY

- The performed economical analysis of selected variants of power plant for the designed inland waterways passenger ship showed that the most economical variant is the power plant consisted of two main combustion engines driving two fixed propellers through reversing-reduction gear (one engine drives one propeller) and two electric generating sets (i.e. variant I).
- The conclusion may be changed in the following situations:
  - ⇨ sudden increase of fuel oil costs in the nearest years
  - ⇨ all-the-year-round operation of the ship over the rivers of entire Europe.

In such case the return time of investment outlays associated with application of variant III (i.e. combustion–electric power plant) will be shorter and probably acceptable for the ship owner.

BIBLIOGRAPHY

1. Bocheński D.: *Comparative analysis of trailing suction hopper dredgers' various types of power plants*. Journal of EXPLO DIESEL & GAS TURBINE 05'. Gdańsk-Międzyzdroje--Kopenhaga, 2005
2. Bocheński D., Kubiak A.: *Analysis and synthesis of ship operation conditions and determination of main propulsion effective power as well as proposed design solutions of ship propulsion system and power plant with taking into account electric power demand* (in Polish). Research reports no. 94/ SPB. Eureka/ 2004. Faculty of Ocean Engineering and Ship Technology, Gdańsk University of Technology. Gdańsk, 2004
3. Bocheński D., Kubiak A.: *Analysis and assessment of investment and energy costs of power plant for an inland waterways passenger ship* (in Polish). Research reports no. 105/SPB. Eureka/ 2004. Faculty of Ocean Engineering and Ship Technology, Gdańsk University of Technology. Gdańsk, 2004
4. Bocheński D., Kubiak A.: *Problems of formulating design technical assumptions as well as current and final verification of preliminary design of power plant for inland waterways passenger ship* (in Polish). Research reports no. 106/SPB. Eureka/2004. Faculty of Ocean Engineering and Ship Technology, Gdańsk University of Technology. Gdańsk, 2004
5. Bocheński D., Rudnicki J.: *Analysis of influence of operation conditions of an inland waterways passenger ship on load of its main engines in the aspect of electric power plant* (in Polish). Research reports no. 220/SPB. Eureka/2005. Faculty of Ocean Engineering and Ship Technology, Gdańsk University of Technology. Gdańsk, 2005
6. Bocheński D., Kubiak A., Rudnicki J.: *Identification of problems associated with elaboration of preliminary design of power plant for inland waterways passenger ship with taking into account energy demand of main propulsion system and electric energy consumers* (in Polish). Research reports no. 221/SPB. Eureka/ 2005. Faculty of Ocean Engineering and Ship Technology, Gdańsk University of Technology. Gdańsk, 2005
7. Gallin C.: *Economics of the CODMAE propulsion concept*. Naval Architect. April 2003
8. Jamroż J., Swolikień T., Wieszczeczyński T.: *Designing of ship power plants* (in Polish). Gdańsk University of Technology. Gdańsk, 1992
9. Michalski J.: *Preliminary determination of main design parameters of ship – predictions of hull resistance* (in Polish). Research reports no. 96/SPB. Eureka/ 2004, Faculty of Ocean Engineering and Ship Technology, Gdańsk University of Technology. Gdańsk, 2004
10. Michalski J.: *Optimisation of inland vessels' route speed. Marine Technology Transactions* (Technika Morska). Polish Academy of Sciences, vol. 15/2004
11. Michalski J.: *Mathematical model for selection of optimum parameters of propulsion system of inland waterways ships - approximation of experimental hull resistance characteristics* (in Polish). Research reports no. 182/SPB. Eureka/2005. Faculty of Ocean Engineering and Ship Technology, Gdańsk University of Technology. Gdańsk, 2005
12. The firms : Caterpillar, Volvo Penta, Emit, Danfoss: Product catalogues, issued in the years 2000-2005

MOST WIEDZY Downloaded from mostwiedzy.pl