AIP Conference Proceedings

RESEARCH ARTICLE | NOVEMBER 02 2018

Experimental research on over-laminated steel sandwich panel connection to determine the form of fatigue failure FREE

Karol Niklas ; Janusz Kozak

Check for updates

AIP Conf. Proc. 2028, 020014 (2018)
https://doi.org/10.1063/1.5066404

View Online
Export Citation
CrossMark

26 February 2024 11:47:05

AIP Publishing

AIP Advances
Why Publish With Us?
25 DAYS average time to 1st decision
740+ DOWNLOADS average per article
INCLUSIVE scope
Learn More
AIP Publishing

Experimental Research on Over-laminated Steel Sandwich Panel Connection to Determine the Form of Fatigue Failure

Karol Niklas[1, a)] and Janusz Kozak[1]

[1]*Gdansk University of Technology, Faculty of Ocean Engineering and Ship Technology, Narutowicza 11/12, 80-233 Gdańsk*

[a)]Corresponding author: karol.niklas@pg.edu.pl

Abstract. The novel means of transport need to meet rising both the economic and ecologic requirements. In recent years the International Maritime Organization (IMO) introduced new measure of ship energy efficiency (the EEDI index), as well as new regulations regarding higher quality of fuel (so called Tier limits). It resulted in much higher interest of the technological development of ships. One of the solution having great potential is the reduction of structural mass. It has at least two positive consequences. The first is the reduction of fuel consumption, the second is possibility if increasing of a ship payload. Both aspect are very beneficious considering the need of meeting the EEDI requirements. The one very lightweight form of structure which is in use in many different branches are sandwich type structures. In a shipbuilding industry this solutions is also being constantly developed. One of the major issue for these thin walled structures is connection between panels and between panels and an ordinary ship structure. For rising fatigue resistance of the connection the over-laminated joint concept was introduced. In this article results of fatigue research on sandwich panels joint with the CFRP overlays are presented. The experimental research was performed in a full scale to identify the form of fatigue failure. On the basis of the research three characteristic stages of fatigue damage were identified.

26 February 2024 11:47:05

1. INTRODUCTION

The steel sandwich panels find application in advanced ship structures. Particularly the solution was applied in a construction of ro-ro type ships (mid-decks, platforms, ramps, walls etc.). However the sandwich panels are relatively new form of structure being a good compromise between material properties and fabrication costs. The panels are produced from relatively cost effective material (high strength steel), but arranged in a very thoughtful way giving the structure a considerable stiffness at a low weight. This is because of the use of the sandwich structure concept. Similar approach can be seen in many other branches like aviation, yacht industry. However, it should be kept in mind that design regulations in a shipbuilding industry does not allow for the use of non-metallic materials for structural members of hulls. This is due to fire resistance requirements of the SOLAS convention. Thus the sandwich panels for ship applications need to be fabricated of steel or aluminum alloy's. The one of major problem which limits wider application of metallic sandwich structures in shipbuilding is lack of adequate knowledge and experience in determining of fatigue durability. A particular issue is the connection between the panels having insufficient fatigue durability of welds. The fatigue assessment of such connection cannot be performed with standard approach due to too low thickness of structural members (2-3mm) and uncommon weld geometry. In recent years several works investigated the fatigue life of such structures [1-7].

One of the noteworthy ways to increase the fatigue life of steel joints is the over-lamination – covering plate surface with Fiber Reinforced Plastics (FRP). In recent years several papers regarding the influence of application the composite reinforcements on fatigue resistance were published. The paper [9] investigated over-laminated steel plates and found that it was possible to increase the fatigue resistance by 1.2 times up to 7.9 times depending on the configurations of the overlapping composite structure. Also two modes of failure were observed: debonding for normal modulus CFRP and fiber breakage for a high modulus CFRP. Two sided over-lamination raised the fatigue life by 2.2-2.7 time for normal modulus CFRP and 4.7-7.9 times for high modulus CFRP sheet plates. The increase of fatigue

MOST WIEDZY Downloaded from mostwiedzy.pl

Fatigue Failure and Fracture Mechanics XXVII
AIP Conf. Proc. 2028, 020014-1–020014-6; https://doi.org/10.1063/1.5066404
Published by AIP Publishing. 978-0-7354-1750-2/$30.00

life resulting from reinforcing steel structure by adding laminate reinforcements was also reported by [10]. Authors performed experimental research on scaled steel beams and found straightening steel by additional composite layers beneficial. The paper [11] investigated possibility of reinforcing aged steel bridges to increase its fatigue life. It was found that by application of the CFRP the lifetime of the structure can be extended as much as 10 times. In [12] authors proposed a concept of over-laminated connection of aluminum sandwich panels and found significant improvement of the fatigue strength. Also different failure modes were found: laminate debonding; balsa core failure. However the typical destruction form was the aluminum structure shear failure due to significantly increased strength of the over-laminated connection. Over the recent years also many other works were published proofing the huge potential of rising the fatigue life on metallic thin-walled structures by composite over-lamination, i.e. [13-18].

In this article the application of a composite consisting of carbon fibers reinforcement in an epoxy resin matrix, noted as Carbon Fiber Reinforced Plastic (CFRP) was investigated. The goal of presented research was to determine the form of fatigue destruction of the connection between the I-core type steel sandwich panels strengthened by the CFRP overlays. The full scale fatigue experimental testing was conducted at the Laboratory of Technology and Strength of Ship and Offshore Structures, Gdansk University of Technology.

2. SAMPLES OF THE SANDWICH PANELS

The experimental research was conducted in a full scale with the use of samples cut from the all steel I-core type sandwich panels. Samples were taken from panels manufactured in one series and constituted a representative part of the structure. Each of the sample was prepared for lamination by sandblasting and then cleaning from dust and degreasing. Next the samples were over-laminated by 3mm of the CFRP composite and left for curing in a room temperature (22^0C, 2 weeks). Each sample was laminated on two sides of the sandwich panel. The number of samples was 5 for the purpose of presented study. The material properties of the composite connection was described in Table 1. The geometry and dimensions of samples are shown in Fig.1.

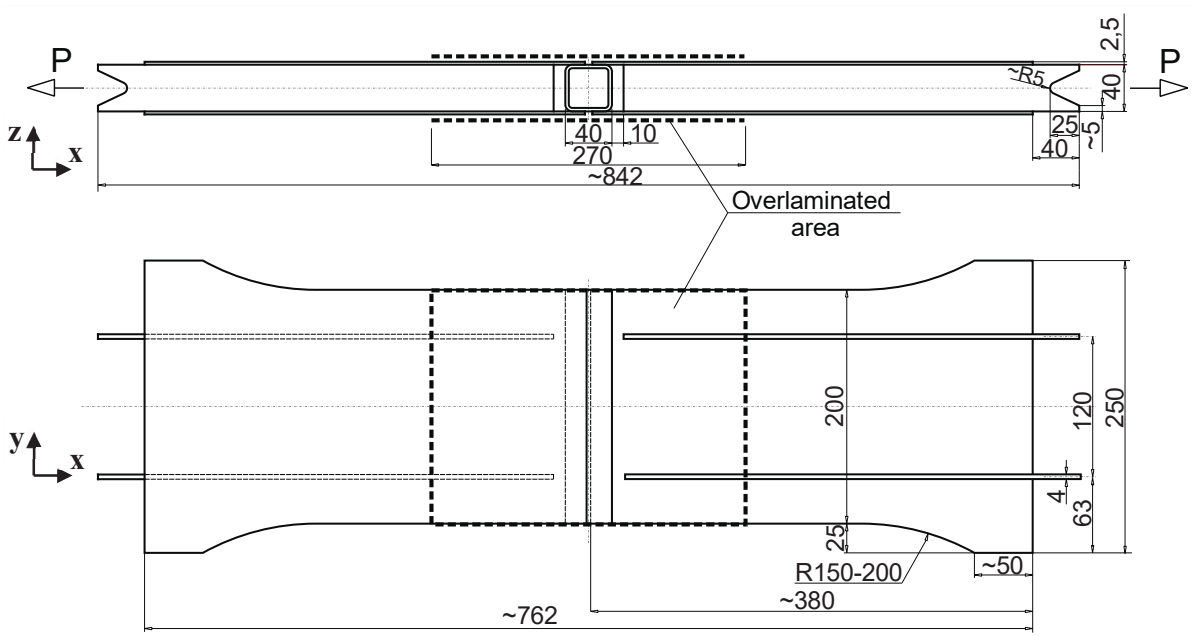

FIGURE 1. Geometry and dimensions of I-core steel sandwich panel with schematically shown CFRP overlays (dashed lines)

26 February 2024 11:47:05
MOST WIEDZY Downloaded from mostwiedzy.pl

TABLE 1. Material properties of steel used for I-core panel fabrication and calculated properties of CFRP overlay

	Property	Value	Unit
Steel RAEX 355 MC LASER	Young Modulus E	2e5	MPa
	Poisson ratio ν	0.3	-
	Yield Point R_e	355	MPa
	Ultimate Strength R_m	430-510	MPa
CFRP overlay	Young Modulus E_1	125	GPa
	Young Modulus E_2	8	GPa
	Poisson ratio ν_{12}	0.25	-
	Poisson ratio ν_{23}	0.45	-
	Shear Modulus G_{12}	5.0	GPa
	Shear Modulus G_{23}	3.2	GPa

3. RESEARCH PROGRAM

The fatigue research were conducted according to the standard ISO 1099:2006 [8]. Samples were tested for cyclic loading with constant amplitude of sinusoidal function with a frequency of 5 Hz and the cycle asymmetry factor equal R=0. The loading was in x-axis direction shown in Fig.1. The testing was stopped until the complete failure of the samples occurred, which was defined as physical separation of the investigated composite joints into two or more pieces.

4. RESULTS

The effect of presented fatigue tests was identification of the form of fatigue failure for analyzed composite connection. All investigated samples had similar form of damage. On the basis of recorded measurement data the three stages of fatigue damage were identified, see Fig 2. In Fig 3 schematic drawing of the damage process was shown for clarification.

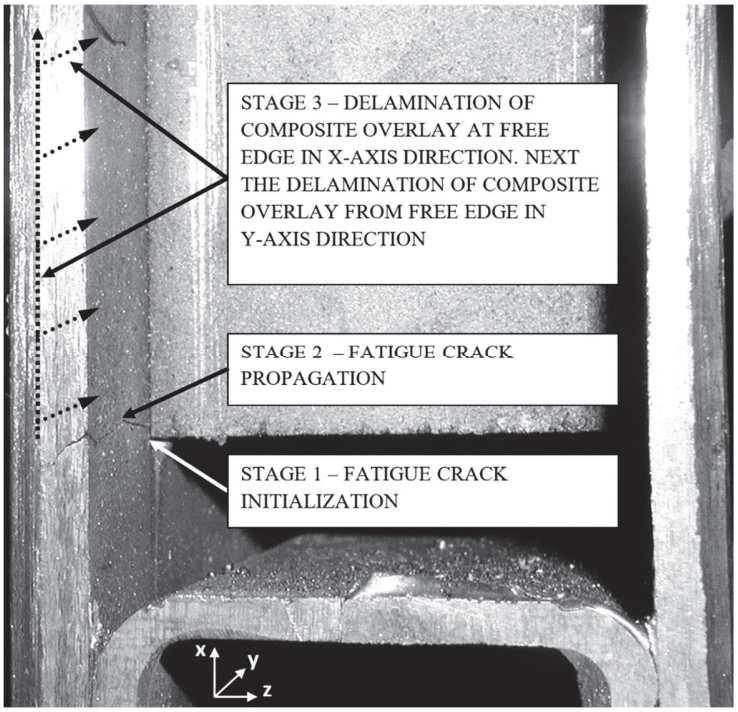

FIGURE 2. The fatigue damage process of the connection of sandwich panels with composite CFRP overlays

26 February 2024 11:47:05
MOST WIEDZY Downloaded from mostwiedzy.pl

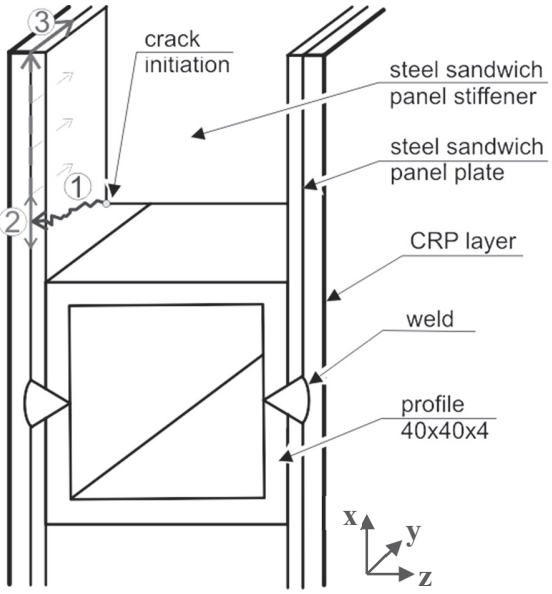

FIGURE 3. Schematic drawing of the damage process of the connection of I-core sandwich panel with composite CFRP overlays

The fatigue damage process took place in three stages, consecutively (see Fig. 2 and Fig. 3):

- STAGE 1 – Initialization of the fatigue crack at the geometric notch placed at the corner of internal stiffener.
- STAGE 2 – Fatigue crack propagation in a steel plate towards free edge of the panel and perpendicularly to the load direction.
- STAGE 3 – Delamination of composite overlay starting from free edge of the panel toward x-axis direction (parallel to the load direction). Next, progressing delamination of composite overlay from free edge of the panel toward y-axis direction (perpendicularly to the load direction) until the total fracture.

The fatigue failure form of examined samples was separation into two pieces resulting from a fatigue crack of steel plate and then debonding of composite CFRP overlays at the border of materials, see Fig. 4. In the propagation phase of the steel structure cracking, the composite overlays were able to fully carry the applied load. After the steel structure was completely cracked the debonding process started from a free edge of the sample. This resulted in significant improved lifetime of the structure. The average value of fatigue life was increased by 1.8 times in comparison with a reference samples without the CFRP overlays. Considering the real-life deck structure that usually does not have free edges and increase of fatigue life most probably would be higher.

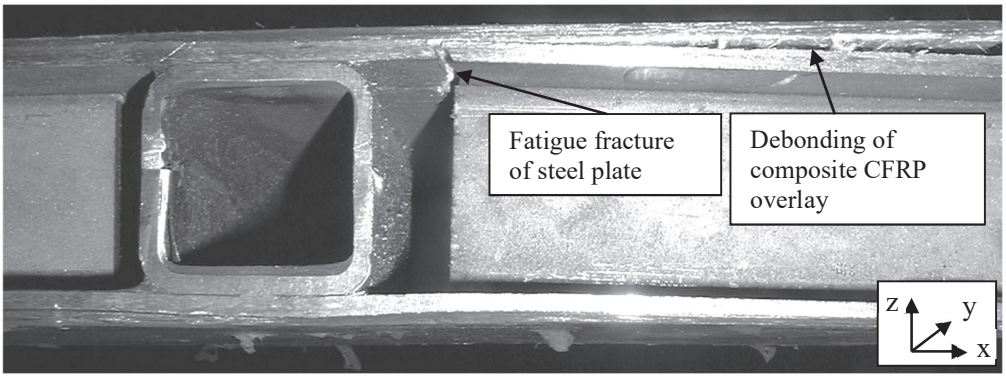

FIGURE 4. The form of fatigue failure of the connection of I-core panels with the CFRP overlays

26 February 2024 11:47:05

MOST WIEDZY Downloaded from mostwiedzy.pl

5. SUMMARY

The welds of steel sandwich panels connect outer plates with internal stiffeners and are crucial members ensuring the structural integrity and ability to carry loads. Fatigue resistance of such connections cannot be calculated on the basis of any standard design approach because of a very thin plates (below 5mm) and nonstandard weld geometry and material properties. However the individual fatigue assessment can be performed by an experimental research.

In presented article the experimental fatigue research on the connection of steel sandwich I-core type panels with the composite CFRP overlays was presented. The research was conducted to identify the fatigue damage process of the analyzed composite connection. The full scale testing performed with the use of 5 samples proved the repeatability of the results. The fatigue damage process was described in three stages. The average increase of the fatigue life by 1.8 times was observed due to the use of composite overlays. The increase of fatigue resistance of a sandwich type connections is of great practical importance. In future it may contribute to their wider use in a ship construction and other means of transport for which the reduction of its own weight is crucial (i.e. road transport, rail transport).

On the basis of presented research some important observations have been made which can be used in a continuation of the research. Most probably the improvement of an adhesion between the composite CFRP overlay and steel plate can be achieved. Detailed investigation of the influence of special surface treatment on fatigue life can be performed. It is expected to significantly improve the adhesion of the CFRP overlays if the steel plates would have dedicated parameters, i.e. surface roughness.

ACKNOWLEDGMENTS

The numerical research was partly supported by the EU-funded research project DE-Light Transport.

REFERENCES:

1. D. Radaj, C. M. Sonsino, W. Fricke, 'Fatigue assessment of welded joints by local approaches', 2nd Ed. Cambridge, England: Woodhead Publishing Limited, ISBN-13:978-1-85573-948-2, 2006.
2. D. Boroński, J. Szala, Tests of local strains in steel laser-welded sandwich structure, Gdańsk: Polish Maritime Research, Special issue 2006/S1, ISSN 1233-2585, 2006.
3. J. Kozak, "Fatigue Life of Steel Laser-Welded Panels", Polish Maritime Research, Special issue 2006/S1, pp. 13-16.
4. P. Kujala, K. Kotisalo and T. Kukkanen, "Fatigue of All Steel Sandwich Panels – Application on Bulkheads and Decks of a Cruising Ship", Proceedings of the Seventh International Symposium on Practical Design of Ships and Mobile Units, The Hague, September 1998, pp. 879-887, 1998.
5. W. Fricke, I. Paetzhold and D. Zipfel, "Fatigue Tests and Numerical Analyses of a Connection of Steel Sandwich Plates", Welding in the World 53 (7-8): R151-R157, 2009.
6. H. Remes, Strain-based approach to fatigue strength assessment of laser-welded joints, Doctoral Dissertation. Espoo: Helsinki University of Technology, ISBN 978-951-22-9189-2, 2008.
7. K. Niklas, "Search for optimum geometry of selected steel sandwich panel joints," *Polish Marit. Res.*, vol. 15, no. 2, 2008
8. ISO 1099:2006 Metallic materials - Fatigue testing – Axial force-controlled method.
9. H. Liu, R. Al-Mahaidi, and X.-L. Zhao, "Experimental study of fatigue crack growth behaviour in adhesively reinforced steel structures," *Compos. Struct.*, vol. 90, no. 1, pp. 12–20, Sep. 2009.
10. J. Deng and M. M. K. Lee, "Fatigue performance of metallic beam strengthened with a bonded CFRP plate," *Compos. Struct.*, vol. 78, no. 2, pp. 222–231, Apr. 2007.
11. M. Tavakkolizadeh and H. Saadatmanesh, "Fatigue Strength of Steel Girders Strengthened with Carbon Fiber Reinforced Polymer Patch," *J. Struct. Eng.*, vol. 129, no. 2, pp. 186–196, Feb. 2003.
12. M. Hentinen, M. Hildebrand, and M. Visuri, "Adhesively bonded joints between FRP sandwich and metal: Different concepts and their strength behaviour," *VTT Tied. - Valt. Tek. Tutkimusk.*, no. 1862, 1997.
13. N. K. Photiou, "Strengthening of an artificially degraded steel beam utilising a carbon/glass composite system," *Constr. Build. Mater.*, vol. 20, no. 1–2, pp. 11–21, Feb. 2006.
14. A. Fam, S. Witt, and S. Rizkalla, "Repair of damaged aluminum truss joints of highway overhead sign structures using FRP," *Constr. Build. Mater.*, vol. 20, no. 10, pp. 948–956, Dec. 2006.
15. S. C. Jones and S. A. Civjan, "Application of Fiber Reinforced Polymer Overlays to Extend Steel Fatigue Life," *J. Compos. Constr.*, vol. 7, no. 4, pp. 331–338, Nov. 2003.

26 February 2024 11:47:05
MOST WIEDZY Downloaded from mostwiedzy.pl

16. H. Hosseini-Toudeshky, G. Sadeghi, and H. R. Daghyani, "Experimental fatigue crack growth and crack-front shape analysis of asymmetric repaired aluminium panels with glass/epoxy composite patches," *Compos. Struct.*, vol. 71, no. 3–4, pp. 401–406, Dec. 2005.
17. M. Bocciarelli, P. Colombi, G. Fava, and C. Poggi, "Fatigue performance of tensile steel members strengthened with CFRP plates," *Compos. Struct.*, vol. 87, no. 4, pp. 334–343, Feb. 2009.
18. H. Osnes and D. McGeorge, "Analysis of overlaminated double-lap joints," *Compos. Part B Eng.*, vol. 36, no. 6–7, pp. 544–558, 2005.

26 February 2024 11:47:05

MOST WIEDZY Downloaded from mostwiedzy.pl