Metrol. Meas. Syst. Vol. XVI (2009), No 4, pp. 677-682

PAN
POLSKA AKADEMIA NAUK

METROLOGY AND MEASUREMENT SYSTEMS

Index 330930, ISSN 0860-8229
www.metrology.pg.gda.pl

M&MS

MOBILE MONITORING SYSTEM FOR GASEOUS AIR POLLUTION

Ryszard J. Katulski[1)], Jacek Namieśnik[1)], Jacek Stefański[1)], Jarosław Sadowski[1)], Waldemar Wardencki[1)], Krystyna Szymańska[2)]

1) Gdansk University of Technology, Faculty of Electronics, Telecommunication and Informatics, G. Narutowicza 11/12, 80-233 Gdańsk, Poland (rjkat@eti.pg.gda.pl, chemanal@pg.gda.pl, jstef@eti.pg.gda.pl, ✉ jarsad@eti.pg.gda.pl, +48 58 347 2211, wawar@chem.pg.gda.pl)
2) ARMAAG Foundation, Elbląska 66, 80-761 Gdańsk, Poland (krystyna@armaag.gda.pl)

Abstract

The concept of a mobile monitoring system for chemical agents control in the air is presented. The proposed system can be applied to measure industrial and car traffic air pollution. A monitoring station is relatively small and can be placed on cars or public transportation vehicles. Measured concentrations of air pollutants are collected and transferred via the GSM network to a central data base. Exemplary results from a measurement series in Gdańsk are also presented.

Keywords: air pollution monitoring.

© 2009 Polish Academy of Sciences. All rights reserved

1. Introduction

Air quality is a basic factor of good life. Polluted air negatively influences health and in some cases may even lead to death. Pollution levels which negatively affect life on earth are nowadays well defined.

The most important tool in environmental protection is monitoring [1, 2, 3, 4]. Many Polish cities have various fixed monitoring stations, which measure the level of basic chemical agents in the air. One of the most important causes for air pollution in big cities is urban traffic, but the measurement of air pollution along communication lanes is still very rare. It is caused by the fact that the equipment used in fixed air quality monitoring stations (which gives very accurate and reliable results) is voluminous and heavy and cannot be used for measurements in motion. The proposed monitoring system is made of mobile monitoring units, which are small and light enough to be put on public transportation vehicles (buses, trams) and even cars. They can be used to measure, record and transmit to a central database the concentration of various air pollutants, together with weather conditions such as temperature, relative humidity and geographic coordinates from a GPS receiver. These units can provide support for fixed stations by taking measurements in certain places selected for additional control or by measurements in motion.

Many different methods can be used to measure the level of gaseous air pollutants by mobile or portable devices [5]. For example, gas chromatography (GC) and mass spectroscopy (MS) devices provide a high degree of data certainty, but require some kind of sample preparation so time resolution is not very good. Laser-inducted breakdown spectroscopy (LIBS) offers real-time response and high accuracy and does not require sample preparation. Recent LIBS devices are small enough to be used as mobile units. A summary of different measurement methods used in non-stationary monitoring devices and a list of some examples of air monitoring systems was presented by the authors in [5].

Article history: received on Jul. 2, 2009; received in revised form on Nov. 23, 2009; accepted on Nov. 30, 2009, available online on Dec. 11, 2009.

Semiconductor sensors are not as accurate as spectroscopy-based devices but they are much smaller and easy to integrate with a data collecting unit. Small size and weight were the reason for choosing these sensors for the proposed mobile monitoring system.

2. Sensors description

Road traffic is responsible for emission of several air pollutants, the most important being nitrogen oxides (NO and NO_2, together called NO_x) which may harm the lungs and trigger asthma, sulphur dioxide (SO_2), particulate matter (PM), carbon monoxide (CO), carbon dioxide (CO_2) and volatile organic compounds (VOCs) which can contribute to the formation of secondary pollutants with different efficiencies [6, 7]. The measurement of particulate matter in air requires some air filtering and mass measuring during specified time which cannot be made using semiconductor sensors and is not applicable to mobile monitoring units. Other air pollutants can be measured using thick-film semiconductor sensors. Prototypes of monitoring units for proposed systems use selected sensors made by Figaro:

- TGS2442 – CO sensor, response: resistance of SnO_2 layer on electrical insulation layer. Response time: tens of seconds;
- TGS4161 – CO_2 sensor, response: electromotive force which is the result of electrochemical reaction of CO_2 and electrodes made of gold and lithum carbonate with cation (Na+) solid electrolyte. Response time: up to 1 minute, recovery time: up to 2.5 minutes;
- TGS823 – VOC sensor. This sensor reacts to the presence of several volatile organic compounds, such as: benzene (C_6H_6), ethanol, n-hexane, acetone, isobutane and others, but is used mostly for detection of benzene which is found in highest concentrations. Response: resistance of SnO_2 layer, response time: tens of seconds;
- TGS2106 – NO_2 sensor, response: resistance of metal-oxide semiconductor layer. Response time: several seconds;
- TGS2201 – NO_x and CO sensor (double) used only for NO_x measurement, response: resistance of metal-oxide semiconductor layer. Response time: tens of seconds.

Some of these sensors were designed for measurement of gases in ppm (parts per million, 10^{-6}) concentration, but the concentration of NO_x, CO or C_6H_6 in typical air condition is of the order of ppb (parts per billion, 10^{-9}). However, comparison of results from several months of measurements proved that after proper calibration and compensation of air temperature and humidity, they are stable enough and precise for determining the sources and regions of highest pollution caused by road traffic.

All of the gas concentration sensors are heated using internal heaters as a substrate for the sensing structure. The temperature of substrate cannot be controlled because no temperature sensor is built in the substrate of the gas-sensing element. Correction of substrate temperature change caused by a change in temperature of air flowing around the sensor is done by measuring the temperature of air using an additional semiconductor sensor and proper calibration equations.

Proper heating of gas concentration sensors takes up to several tens of minutes. During this period results of measurements cannot be considered as reliable results. Also any break in powering the sensors makes results unstable for some unpredictable time (up to several minutes) so a monitoring device with such sensors needs to provide uninterrupted heating of sensors during the whole measurement period.

MOST WIEDZY Downloaded from mostwiedzy.pl

3. Air monitoring unit

The block diagram of a mobile monitoring unit is presented in Fig. 1.

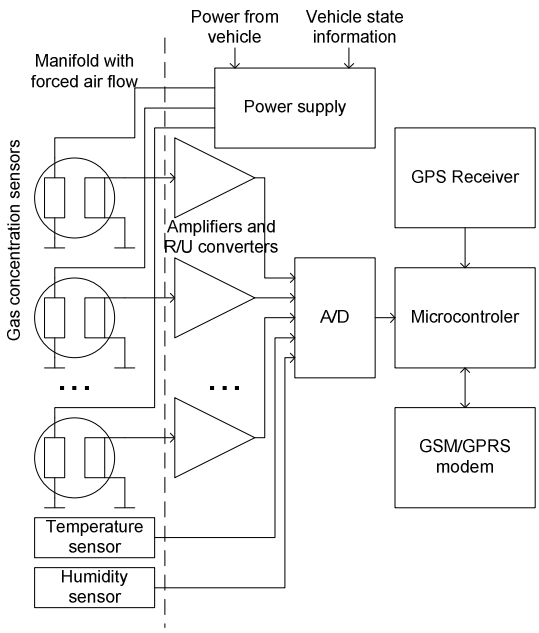

Fig. 1. Block diagram of a mobile monitoring unit.

The first version of the measurement device was equipped with a factory-made module with sensors, A/C converters and a microcontroller to convert the sensor's electric response to gas concentrations. This module was connected to a communication unit which aggregated measurement results with geographic coordinates from GPS and sent these data to a server using a GSM/GPRS link. Positive test results and the confirmed usefulness of the proposed device encouraged the authors to build the next generation of a monitoring station based on a set of sensors described in Section 2. The interior of one of the monitoring unit prototypes built in a Gdansk University of Technology laboratory is shown in Fig. 2.

Fig. 2. Mobile monitoring unit prototype.

MOST WIEDZY Downloaded from mostwiedzy.pl

The gas concentration sensors together with temperature and humidity sensors are put inside a manifold shown at the top of Fig. 2. Air flow inside the manifold is forced by a fan, whose rotational speed is controlled by a microprocessor, because a change in the flow rate will change the gas sensor's substrate temperatures as air is cooling the casings of sensors and in consequence may influence accuracy of measurements.

The electrical response of gas sensors is converted into voltage signals using a very high impedance operational amplifier (for the EMF output) or by resistive voltage divider (for the resistive output). Then the signals are passing low-pass filters with a cut-off frequency of about 10Hz for all sensors except TGS2442 which requires pulsed resistance measurement and therefore the filter cut-off frequency has to be higher than 100Hz. Additional noise-filtering is made by the microprocessor which averages digital values after A/D conversion during 10-second periods. Averaged digital values are being transmitted to a server without any additional conversion. The calculation of gas concentration is made by the server using nonlinear equations derived during the calibration procedure. The other data sent to the server in every packet are:

- a monitoring unit identification number;
- geographical coordinates of the measurement point (from the GPS receiver);
- speed and direction of movement (from the GPS receiver);
- date/time of measurement (from the GPS receiver);
- temperature and humidity of air in the manifold;
- temperature of electronic circuits outside the manifold;
- external or internal power supply voltage;
- state of a vehicle engine in the case of mounting the device on a car/bus;
- error flags which indicate the condition of the monitoring unit.

Data transmission uses the GPRS/EDGE radio link and the TCP/IP protocol stack. To avoid writing a special software on the server side, data records are encoded as a special HTTP request. Such requests are easily handled by PHP script and after decoding, the raw data records are written to a MySQL database.

The proposed monitoring unit can be described as maintenance-free. A properly configured and set up monitoring station can operate for several months without intervention. Information about the state of the unit and possible errors in the functioning of electronic components or problems with data collection are transmitted to the responsible person via short messages (sms).

4. Examples of calibration equations

In order to verify the accuracy of measurements, results obtained by the mobile monitoring units were compared with results from fixed measurement stations owned by the ARMAAG foundation (Agency of Regional Air Quality Monitoring in the Gdańsk metropolitan area). Every monitoring unit built in laboratories of Gdansk University of Technology was installed in the fixed monitoring stations and then during several weeks the results from the proposed monitoring units were compared with precise gas concentrations measured using reference methods. Using this comparison, the form of equations and values of coefficients to convert values of electrical signals from sensors to the concentration of gas measured in the air was derived. For example, the concentration of NO_x can be calculated from the resistance of one of the tested TGS2201 sensors using the equation:

$$NO_x\left[\mu g / m^3\right] = -1.3 \cdot temp\left[^\circ C\right] - 0.25 \cdot hum[\%] - 1.76 \times 10^{-5} \cdot R_{TGS2201}[\Omega] + 78.8 \qquad (1)$$

and calculation of concentration of C_6H_6 requires the equation:

MOST WIEDZY Downloaded from mostwiedzy.pl

$$C_6H_6\left[\mu g/m^3\right]=10^{-2.8\cdot\log_{10}\left(R_{TGS\,823}[\Omega]\right)-0.63\cdot\log_{10}\left(temp\left[^\circ C\right]\right)-0.23\cdot\log_{10}\left(hum[\%]\right)+15.3}. \quad (2)$$

In general, these equations are non-linear, and additionally measurement of ppb-level concentrations makes the discrepancy between the characteristics of different sensors significant. This means that each copy of the mobile monitoring unit must pass a separate measurement calibration procedure in a special calibration chamber with precisely known concentrations of selected gases. The cost of equipment calibration is the largest part of the total cost of the whole mobile monitoring system, as almost all electronic components and sensors are not expensive and the electronic circuit assembly procedure is rather simple.

5. Exemplary results and application

An exemplary comparison of the results of measuring the concentration of nitrogen oxides NO_x in the air, obtained by the reference method and by the mobile monitoring unit using semiconductor sensors is presented in Fig. 3.

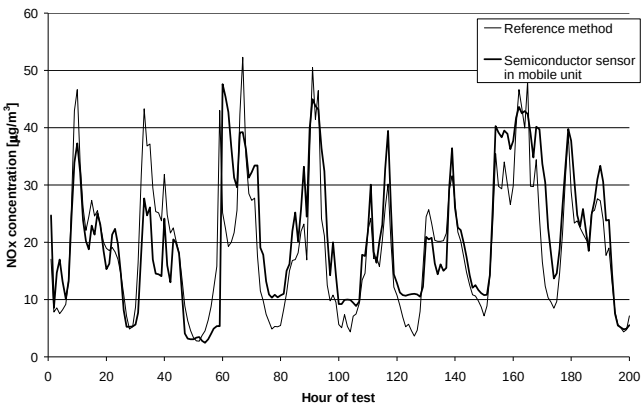

Fig. 3. Comparison of NO_x concentration measured by the proposed mobile monitoring unit and by the reference method.

In this example the concentration of NO_x was calculated using equation (1). Coefficients in this equation were selected using a linear regression analysis. The mean measurement error was equal to zero while the standard deviation was slightly above 6μg/m^3. Similar results were obtained for the compliance of the other chemicals measured. Such accuracy is sufficient to use the results of measurements obtained using the proposed mobile monitoring units to determine areas with highest pollution caused by road traffic and a lot of such measurements were already made.

For example, the level of pollution was examined within the major crossroads in various states of utilization, and within selected districts of the city near the main streets of the Gdańsk agglomeration. Another measurement campaign involved a comparison of pollution along the national road no. 1 and the highway A1 before and after opening the section of A1 from Gdańsk to Swarożyn. In this case the monitoring device was mounted on the roof of a car. Mobile monitoring stations were also used to determine the concentration levels of industrial pollution in places distant from the city centre and to measure traffic pollution in Warsaw – in stationary conditions.

MOST WIEDZY Downloaded from mostwiedzy.pl

5. Summary

The presented mobile monitoring system contributes to the improvement of ecological safety in the area of the Gdańsk agglomeration. It increases the knowledge about air pollution by measuring the concentration of the most dangerous gas air pollutants in places with no fixed monitoring stations. The proposed monitoring units are inexpensive, small and lightweight. The accuracy of results from semiconductor sensors used to build the prototype is sufficient for a device that is intended to support, not substitute fixed air quality monitoring stations.

The mobile monitoring system won the award of the Marshal of Pomorskie Voivodeship in the category "Environment protection and ecology" during the 4th Fair of Industrial Engineering, Science and Innovation in Gdańsk.

Acknowledgment

This work was supported by the Ministry of Education and Science of the Republic of Poland, under grant No. 3 T09D 100 29 and by the Regional Fund for Environmental Protection under grant No. WFOŚ/D/201/210/2007. Authors would also like to thank the Foundation ARMAAG for the support during realisation of this project.

References

[1] T. Nohmi, H. Ueno: "Detection of carbon dioxide in urban search and rescue as an application for miniaturized mass spectrometers". *J. Mass Spectrom. Soc.*, vol. 51, no. 1, 2003, pp. 264-266.

[2] V. Gros, B. Bonsang, R. S. Esteve: "Atmospheric carbon monoxide in situ monitoring by automatic gas chromatography". *Chemosphere: Global Change Sci.*, vol. 1, 1999, pp. 153-161.

[3] M. Watanabe, T. Takamatsu, M. K. Koshikawa, K. Sakamoto, K. Inubushi: "Simultaneous determination of atmospheric sulphur and nitrogen oxides using a battery-operated portable filter pack sampler". *J. Environ. Monit.*, vol. 8, 2006, pp. 167-173.

[4] E. Yamada, K. Matsushita, M. Nakamura, Y. Fuse, S. Miki, K. Fujimoto, H. Morita, O. Shimada: "Development of portable instrument for the continuous analysis of volatile organic compounds (VOCs) and its application to environmental monitoring". *Environ. Sci.*, vol. 13, 2006, pp. 277-287.

[5] W. Wardencki, R. Katulski, J. Stefański, J. Namieśnik: "The state of the art in the field of non-stationary instruments for the determination and monitoring of atmospheric pollutants". *Critical Reviews in Analytical Chemistry*, vol. 38, no. 4, 2008, pp. 259-268.

[6] W. Wardencki, J. Namieśnik: "Analytical techniques used in monitoring of atmospheric air and stack gases". *New horizons and challenges in environmental analysis and monitoring*, ed. J. Namieśnik, W. Chrzanowski, P. Żmijewska, Chem. Fac. Gdańsk University of Technology, Gdańsk, 2003, pp. 446-463.

[7] J. Namieśnik, W. Wardencki: "Monitoring and analytics of atmospheric air pollution". *Polish Journal of Environmental Studies*, vol. 11, no. 3, 2002, pp. 211-218.

MOST WIEDZY Downloaded from mostwiedzy.pl