PHYSICAL REVIEW A **81**, 060305(R) (2010)

Nonadditivity of quantum and classical capacities for entanglement breaking multiple-access channels and the butterfly network

Andrzej Grudka[1,2] and Paweł Horodecki[2,3]
[1]*Faculty of Physics, Adam Mickiewicz University, PL-61-614 Poznań, Poland*
[2]*National Quantum Information Centre of Gdańsk, PL-81-824 Sopot, Poland*
[3]*Faculty of Applied Physics and Mathematics, Technical University of Gdańsk, PL-80-952 Gdańsk, Poland*
(Received 15 July 2009; published 23 June 2010)

We analyze quantum network primitives which are entanglement breaking. We show superadditivity of quantum and classical capacity regions for quantum multiple-access channels and the quantum butterfly network. Since the effects are especially visible at high noise they suggest that quantum information effects may be particularly helpful in the case of the networks with occasional high noise rates. The present effects provide a qualitative borderline between superadditivities of bipartite and multipartite systems.

DOI: 10.1103/PhysRevA.81.060305 PACS number(s): 03.67.Hk

Introduction. Fundamental discoveries of quantum cryptography without entanglement [1] and with entanglement [2], quantum dense coding [3], and quantum teleportation [4] constitute cornerstones of the domain called *quantum channel theory* [5,6]. Very important, purely quantum phenomena are superadditivities of capacities in multipartite variants of quantum capacity Q with classical side channels [7] (cf. [8]). One of the newly observed effects was the nonadditivity of classical capacity C of multiple-access channels with no side resources [9] (see [10] for a continuous-variables analog). Recently, a fundamental, most striking superadditivity in a bipartite scenario for quantum capacity Q with no side resources was discovered [11] and followed by the announcement of another surprising phenomenon of breaking additivity of secret key capacity K [12] which can be refined to extreme cases [13] (cf. [14]). A challenging open problem is the additivity of classical capacity C in a bipartite scenario. The conjecture of additivity of the so-called Holevo capacity $\chi(\Lambda)$ has been disproved recently in an impressive way [15] when superadditivity for two channels was proven. The problem of the additivity of capacity $C(\Lambda)$ is still open since the latter is an asymptotic quantity. During the research on that fascinating issue it has been shown in particular that bipartite channels which are entanglement breaking [16] (i.e., channels which cannot create entanglement between sender and receiver) cannot contribute to such superadditivity phenomena [16–18].

In the present article we address the question of whether the superadditivity of the capacity of entanglement breaking channels is valid in multipartite scenarios. We find, quite surprisingly, that it is not true: both Q and C (i.e., quantum and classical capacities without side resources) in the case of two-access entanglement breaking channels may exhibit superadditivity when supplied with a highly entangling channel. We show also strong nonadditivity of capacity in the quantum butterfly network [19]. *None* of the present effects can have an analog in bipartite scenarios. In this way, our result provides superadditivity effects sharply discriminating between a bipartite scheme and one with more than two users.

For classical capacities our quantum networks violate a special rule which is valid for all discrete classical networks and follows immediately from the additivity theorem provided in [9]: *in any classical multiple-access network primitive it is impossible to improve the transfer rate of one sender by adding resources to another sender.* Here we shall call it the locality rule (LR) of data transfer.

Multiple-access entanglement breaking channels and superaddivitity. Let us present a pair of channels for which we have superadditivity of quantum capacity. The first channel is presented in Fig. 1. Alice and Bob have d-dimensional inputs, while Charlie has d-dimensional output. The channel performs the Bell measurement on two qudits and sends a result of the measurement to Charlie. Formally our channel can be written as a completely positive trace preserving linear map,

$$\Lambda(\varrho_{AB})=\sum_i \mathrm{Tr}_{AB}(|\Psi^i\rangle\langle\Psi^i|_{AB}\varrho_{AB}|\Psi^i\rangle\langle\Psi^i|_{AB})|\Psi^i\rangle\langle\Psi^i|_C, \tag{1}$$

where $|\Psi^i\rangle_{AB}$ are d^2 orthogonal Bell states. Because $|\Psi^i\rangle\langle\Psi^i|_{AB}$ are Kraus operators of rank one, the channel is entanglement breaking. Hence, the quantum capacity region of this channel is given by $R_A=0$ and $R_B=0$. The second channel is the identity qudit channel from Bob to Charlie. Its quantum capacity region is given by $R_A=0$ and $R_B\leqslant\log_2 d$.

We now find the quantum capacity region of the tensor product of these two channels. Let Bob send half of the maximally entangled pair of qudits through the first channel and the other half through the second channel and let Alice send a qudit through the first channel. Because the first channel measures a qudit sent by Alice and a qudit from the maximally entangled state in the Bell basis and sends a result of the measurement to the receiver, it effectively teleports a qudit sent by Alice to the output of the second channel. Hence, the rate pair $(R_A,R_B)=(\log_2 d,0)$ can be achieved. On the other hand, R_A+R_B cannot be greater than $\log_2 d$ because the first channel performs the complete von Neumann measurement on two qudits. As a consequence, the quantum capacity region of the tensor product of these two channels is given by

$$R_A+R_B\leqslant\log_2 d. \tag{2}$$

Our channel is an entanglement breaking channel in contrast to the channel considered in Ref. [9], which shows

 ©2010 The American Physical Society

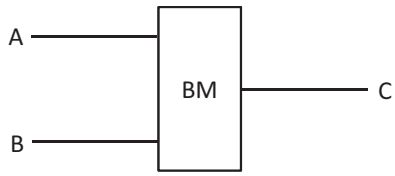

FIG. 1. Entanglement breaking multiple-access channel. BM stands for Bell measurement.

nonadditivity of classical capacity regions. One may wonder if it is possible to show nonadditivity of classical capacity regions for the entanglement breaking channel and some other channel. We demonstrate such a pair of channels. The first channel is presented in Fig. 2. Alice and Bob have d^2- and d-dimensional inputs, respectively, while Charlie has d-dimensional output. The channel transmits a qudit from Bob to Charlie. Depending on the state of Alice's qudit, the state of Bob's qudit is transformed by one of the d^2 unitary operations used in the dense coding protocol. After this transformation, Bob's qudit is sent through the depolarizing channel,

$$D_x(\varrho) = (1-x)\rho + x\frac{I}{d}, \tag{3}$$

while Alice's qudit is discarded. For $x \geqslant \frac{d}{d+1}$, the depolarizing channel, and hence also our channel, is entanglement breaking. The classical capacity region of this channel is given by $R_A + R_B \leqslant C$. C is the Holevo capacity of the depolarizing channel D_x and is given by the formula

$$C = \log_2 d - H_d\left(1 - x\frac{d-1}{d}\right), \tag{4}$$

where $H_d(x) = -x\log_2 x - (1-x)\log_2\frac{1-x}{d-1}$. The second channel is the identity qudit channel from Bob to Charlie. Its classical capacity region is given by $R_A = 0$ and $R_B \leqslant \log_2 d$.

We now turn our attention to the classical capacity region of the tensor product of these two channels. When Bob sends half of the maximally entangled pair of qudits through the first channel and the other half through the second channel, then Alice can transform the maximally entangled state to one of the d^2 orthogonal states by inputting to the first channel one of the d^2 orthogonal states. Because the first qudit from the maximally entangled state is sent through the depolarizing channel and the second qudit is sent through the identity channel, the parties can achieve in this way the rate pair $(R_A,R_B) = (C_E,0)$. C_E is the entanglement assisted classical capacity of the depolarizing channel [20] and is given by the formula

$$C_E = 2\log_2 d - H_{d^2}\left(1 - x\frac{d^2-1}{d^2}\right). \tag{5}$$

Alice cannot send more than C_E bits of information as she does not control the input to the second channel and hence the entanglement assisted classical capacity of the depolarizing channel is the maximal capacity which can be achieved. On the other hand, $R_A + R_B \leqslant \log_2 d + C$ because it cannot be greater than the Holevo capacity of the tensor product of the depolarizing channel and the identity qudit channel. Hence, two extreme points of the classical capacity region of the tensor product of these two channels are given by

$$\begin{aligned}(R_A,R_B) &= (C_E,0),\\ (R_A,R_B) &= (0,C+\log_2 d).\end{aligned} \tag{6}$$

These extreme points prove nonadditivity of capacity regions. If $x \to 1$, then $C_E/C \to d+1$ and we can have arbitrarily large superadditivity of the capacity regions.

Noisy extensions. It is worth noting that one can consider two natural modifications of the channel which demonstrate nonadditivity of quantum capacity. (i) The first one is a mixture of the Bell measurement which happens with probability $1-q$ and classical uniform noise which happens with probability q. Together with the identity qudit channel from Bob to Charlie, this channel can simulate the quantum depolarizing channel D_q from Alice to Charlie. In fact, with probability $1-q$ Charlie can completely recover a quantum message while with probability q he is left with the completely random noise coming from part of the singlet state (apart from completely useless classical uniform noise). Hence, in this case one can achieve $R_A = Q(D_q)$. (ii) Suppose that instead of the just described channel, we have a mixture (with the same probabilities) of the Bell measurement and the identity channel. The channel also returns a flag marking which of the two events happened. If this channel is supported by the identity qudit channel from Bob to Charlie, then one can achieve $R_A = \log_2 d$.

General networks: Amplifying swapping transfer and quantum version of the butterfly network. Consider the channel Φ provided in Fig. 3. Each sender has a d^2 dimensional classical input and a d dimensional quantum one. Since here we deal with quantum channels which have more than one sender, we may also include the *common information* rate [21], that is, the rate of the same information that is faithfully transfered to both receivers $\tilde{A}$ and $\tilde{B}$. We denote the common information rate by $R_X^{(o)}$, where $X = \{A,B\}$ stands for the single sender's system or, more generally, the sender's site which may contain many systems at the local sender's disposal. The total rate vector is denoted by $\mathbf{R} = (R_{A\tilde{A}},R_{A\tilde{B}},R_{B\tilde{B}},R_{B\tilde{B}},R_A^{(o)},R_B^{(o)})$. We must stress here that this description is more detailed than the one usually used (cf. [19]). In fact, one often analyzes only rates $R_{A\tilde{B}}$ and $R_{B\tilde{A}}$ for the fixed values of $R_{A\tilde{A}}$ and $R_{B\tilde{B}}$, which are assumed to contain also common information that is not counted separately. We keep here all rates since it is more natural taking into account the structure of the channel we consider. From the fact that just before both outputs of the channel we have depolarizing channels D_x, it follows that the total capacity region of the channel is contained in the set

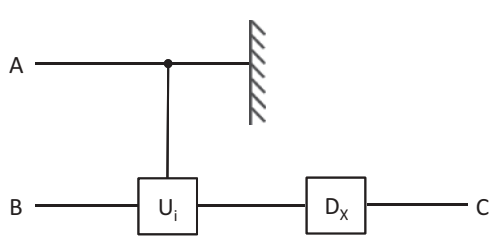

FIG. 2. Entanglement breaking multiple-access channel. U_i stands for controlled unitary operation and D_x stands for depolarizing channel.

MOST WIEDZY Downloaded from mostwiedzy.pl

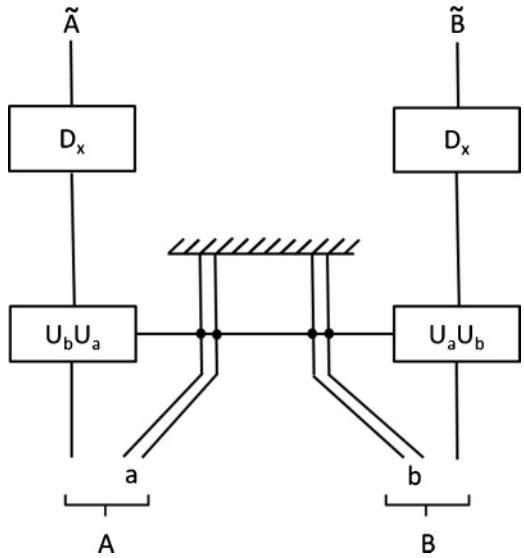

FIG. 3. Entanglement breaking quantum butterfly network. U_a and U_b stand for controlled unitary operations. D_x stands for depolarizing channel.

$\mathcal{S}$ satisfying the following conditions:

$$\begin{aligned} R_{A\tilde{A}} + R_{B\tilde{A}} + R_A^{(o)} &\leqslant C, \\ R_{A\tilde{B}} + R_{B\tilde{B}} + R_B^{(o)} &\leqslant C. \end{aligned} \tag{7}$$

Thus, we have in short $C(\Phi) \subset \mathcal{S}$. Suppose now that we assist the channel with the product of two identity channels, $\Theta_{A'B'\to\tilde{A}'\tilde{B}'} = I_{A'\to\tilde{A}'} \otimes I_{B'\to\tilde{B}'}$. This channel has clearly the transmission rate region $C(\Theta)$:

$$\begin{aligned} R_{A'\tilde{A}'} &\leqslant \log_2 d, \\ R_{B'\tilde{B}'} &\leqslant \log_2 d. \end{aligned} \tag{8}$$

Consider the special strategy achieving particularly interesting transmission rates for the butterfly network from Fig. 3 assisted by two identity channels (see Fig. 4 for the assistance scheme). Any message a by Alice and b by Bob can be sent down their classical input of the channel and at the same time can be encoded by $U_A^{a\dagger} \otimes I_{A'}|\Psi^+\rangle_{AA'}$ and $U_B^{b\dagger} \otimes I_{B'}|\Psi^+\rangle_{BB'}$, where $|\Psi^+\rangle_{XX'}$ is the $d \otimes d$ maximally entangled state and U_X^x is one of the d^2 unitary operations which are used in the dense coding protocol. The channel will effectively send the first half of the state $U_A^b \otimes I_{A'}|\Psi^+\rangle_{AA'}$ through the depolarizing channel and the second half through the identity channel to Alice's receiver's side and at the same time it will effectively send the first half of the state $U_B^a \otimes I_{B'}|\Psi^+\rangle_{BB'}$ through the depolarizing channel and the second half through the identity channel to Bob's receiver's site. However, each of the states is just the same as if it were coming out of a bipartite entanglement assisted quantum depolarizing channel as in the previous paragraph. Hence, both senders achieve now the cross-transfer rates (here the subscripts denote sides and not the systems which must have been marked by additional $\tilde{X}$ notations):

$$\begin{aligned} R_{A\tilde{B}} &= C_E, \\ R_{B\tilde{A}} &= C_E, \end{aligned} \tag{9}$$

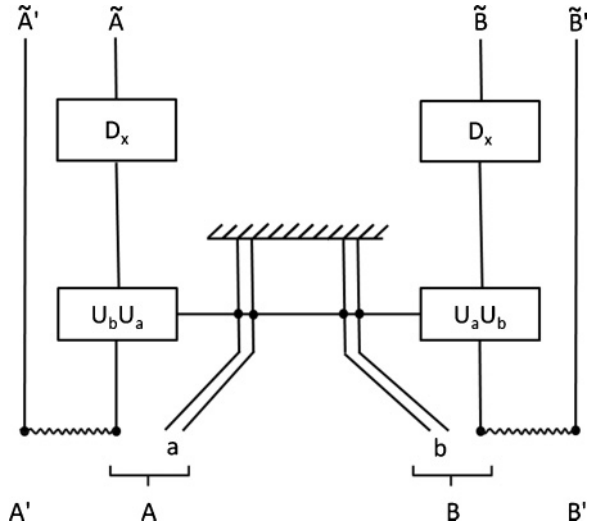

FIG. 4. Entanglement breaking quantum butterfly network assisted by two identity channels.

where $C_E > C$. The other rates in vector $\mathbf{R}$ are equal to zero in the case of these states.

To compare the effect with the classical case, we should prove that it is impossible in a classical network. To show this, consider the part of the network with one of the receivers traced out, for example, tracing out Bob's receiver's parts $\tilde{B}$ and $\tilde{B}'$. Since the input local messages are independent, a classical analog of such a remaining network primitive (i.e., the one with two senders and one receiver) must obey our locality rule (LR). This says immediately that all of what the classical network may offer in bits transmitted from B to $\tilde{A}$, in this case, is C in (9) (instead of C_E) which is the original bound (7). To see it more clearly, let us notice that the additional noiseless d-ary forward channel from A' to $\tilde{A}'$ cannot improve the transfer rate $R_{B\tilde{A}}$ (according to the locality rule applied to this two-access channel with two senders, A and B, and one receiver, $\tilde{A}$), so the latter must remain equal to C as if the new connection $A' \to \tilde{A}'$ did not exist. The aforementioned remark is completely independent of the possible internal machinery of the two-access channel considered as long as it is classical. In particular, it is obeyed by the original XOR gate. This clearly proves that superadditivity of this type cannot happen in classical networks.

Conclusions. Superadditivities of all kinds found so far in quantum scenarios (irrespective of whether they were bipartite or multipartite) required that both channels could create entanglement. For quantum capacities this rule is well understood in the case of a bipartite scenario. On the one hand, an entanglement breaking channel can be simulated with the help of forward classical communication [16]. On the other hand, forward classical communication cannot increase the quantum capacity of the channel [17]. For classical capacities of bipartite channels the rule was proven independently in [18], where it was shown that the Holevo capacity is additive on a tensor product of two channels, when one of the channels is entanglement breaking. It could be expected that the rule could be generalized to multipartite networks. Here we have shown that this is *not* the case. We have considered two types of primitives for quantum networks: two-access channels,

MOST WIEDZY Downloaded from mostwiedzy.pl

that is, one with two senders and one receiver, and the butterfly network. We have proven that even if one channel or network is entanglement breaking, the superadditivity effect may still hold for both classical and quantum capacities if other channels have their transmission rates good enough (the identity channels may be perturbed by low noise and still our results hold by simple continuity arguments). Usually one looks for the effects that discriminate between different types of communication resources. For instance, multipartite entanglement is different from bipartite entanglement since there are nonequivalent types of multipartite entanglement (GHZ and W states). We may ask about the qualitative differences between bipartite and multipartite communication. So far it seemed that all superadditivity effects found in the multipartite case had their, much harder to find, but of similar type, analogs in a bipartite scenario. The present superadditivity effects for entanglement breaking channels sharply discriminate between bipartite and multipartite scenarios; that is, they cannot happen in bipartite scenarios. Finally, we note that the size of the amplification at high noise rates makes it interesting for applications in occasionally very noisy communication systems.

We thank Fernando Brandão and Graeme Smith for valuable comments on the manuscript. This work was supported by the IP SCALA project and partially by the LFPPI network. A.G. was partially supported by Ministry of Science and Higher Education Grant No. N N206 2701 33. P.H. was partially supported by Ministry of Science and Higher Education Grant No. N N202 231937.

[1] C. H. Bennett and G. Brassard, in *Proceedings of the IEEE International Conference on Computers, Systems and Signal Processing* (IEEE Computer Society Press, New York, Bangalore, India, December 1984), p. 175.
[2] A. K. Ekert, Phys. Rev. Lett. **67**, 661 (1991).
[3] C. H. Bennett and S. J. Wiesner, Phys. Rev. Lett. **69**, 2881 (1992).
[4] C. H. Bennett, G. Brassard, C. Crepeau, R. Jozsa, A. Peres, and W. K. Wootters, Phys. Rev. Lett. **70**, 1895 (1993).
[5] C. H. Bennett and P. W. Shor, Science **303**, 1784 (2004).
[6] C. H. Bennett, I. Devetak, P. W. Shor, and J. A. Smolin, Phys. Rev. Lett. **96**, 150502 (2006).
[7] W. Dür, J. I. Cirac, and P. Horodecki, Phys. Rev. Lett. **93**, 020503 (2004).
[8] P. W. Shor, J. A. Smolin, and A. V. Thapliyal, Phys. Rev. Lett. **90**, 107901 (2003).
[9] Ł. Czekaj and P. Horodecki, Phys. Rev. Lett. **102**, 110505 (2009).
[10] Ł. Czekaj, J. Korbicz, R. W. Chhajlany, and P. Horodecki, e-print arXiv:0904.4870.
[11] G. Smith and J. Yard, Science **321**, 1812 (2008).
[12] K. Li, A. Winter, X.-B. Zou, and G.-C. Guo, Phys. Rev. Lett. **103**, 120501 (2009).
[13] G. Smith and J. A. Smolin, Phys. Rev. Lett. **103**, 120503 (2009).
[14] G. Smith and J. A. Smolin, Phys. Rev. Lett. **102**, 010501 (2009).
[15] M. B. Hastings, Nat. Phys. **5**, 255 (2009).
[16] M. Horodecki, P. W. Shor, and M. B. Ruskai, Rev. Math. Phys. **15**, 629 (2003).
[17] C. H. Bennett, D. P. DiVincenzo, J. A. Smolin, and W. K. Wootters, Phys. Rev. A **54**, 3824 (1996).
[18] P. W. Shor, J. Math. Phys. **43**, 4334 (2002).
[19] D. Leung, J. Oppenheim, A. Winter, e-print arXiv:quant-ph/0608223.
[20] C. H. Bennett, P. W. Shor, J. A. Smolin, and A. V. Thapliyal, Phys. Rev. Lett. **83**, 3081 (1999).
[21] T. M. Cover and J. A. Thomas, *Elements of Information Theory* (Wiley & Sons, New York, 1991).

MOST WIEDZY Downloaded from mostwiedzy.pl