TASK QUARTERLY 7 No 3 (2003), 309–317

RESEARCH INTO FLOWS IN TURBINE BLADE SEALS PART I: RESEARCH METHODS

JANUSZ BADUR[1], KRZYSZTOF KOSOWSKI[2], ROBERT STĘPIEŃ[2] AND MARIAN PIWOWARSKI[2]

[1] *Institute of Fluid-Flow Machinery, Polish Academy of Sciences, Fiszera 14, 80-952 Gdansk, Poland*
jb@imp.gda.pl

[2] *Faculty of Ocean Engineering and Ship Technology, Gdansk University of Technology, Narutowicza 11/12, 80-952 Gdansk, Poland*
{kosowski,rstepien}@pg.gda.pl

(Received 31 January 2003; revised manuscript received 10 April 2003)

Abstract: Flows in the shroud clearance affect leakage losses and, thus, the turbine stage efficiency. However, at the same time, the distribution of pressure in the seal gaps plays an important role in the generation of the so-called "pressure forces", which may cause self-excited rotor vibrations of the aerodynamic type. Our investigations were carried out in order to show how a CFD code can cope with determining the pressure field in a rotor-blade shroud clearance. Experimental investigations of the pressure field in the shroud clearance were performed on a one-stage air model turbine of the impulse type. Measurements of pressure distribution were carried out for various rotor speeds and turbine loads. 3D calculations of flows in the model turbine were performed using the FLUENT CFD code. The calculations were carried out for the same variants which had been measured experimentally. In this part of the paper, the experimental stand and the numerical methods are described, while a detailed numerical analysis and a comparison between the experimental and the calculated results are presented in parts II and III, respectively.

Keywords: turbine seals, CFD calculations, experimental investigations

1. Introduction

The distribution of pressure in the seal gaps not only affects the so-called leakage losses and the overall turbine stage efficiency, but also play an important role in the generation of aerodynamic forces, which may cause self-excited rotor vibrations. Various theoretical models have been elaborated to describe the fluid motion in the seals and to determine the aerodynamic forces generated in a shroud clearance. These methods and their experimental verification have been presented in a number of published works. Diettzen and Nordman [1] described turbulent flows in

seals by means of the Navier-Stokes equations and the k-ε turbulence model. Tam *et al.* [2] applied Computational Fluid Dynamic directly to the numerical study of forces generated in seals and bearings. Tallman and Lakshminarayana [3] performed a numerical simulation of tip leakage flows in axial turbines and came to the conclusion that the distribution of the pressure field inside the gap was non-smooth. They stated that *the non-smoothness in the pressure distribution is in some part physically representative of a real turbine*. Kostyuk and Shan [4] analysed non-stationary flows in impulse turbine stages with various types of shroud seals. Fluctuations of flow parameters are observed in the main flow and in the blade tip clearance. The physical aspect of this flow, including the vorticity and turbulence fields, was described and experimentally researched by Xiao *et al.* [5] and McCarter *et al.* [6]. Pfau *et al.* [7], when investigating an annular cascade with a labyrinth seal, emphasised vorticity and a periodic static pressure field in the inlet and exit cavities. Wallis *et al.* [8] recorded velocity fluctuations in a blade shroud cavity of a model turbine, indicating that rotor blade rotation influenced the flow in the cavity. It seems that pulsations of all parameters should be treated as normal behaviour of the gas (or steam) flowing in every element of flow parts of turbomachinery systems. For example, disturbances of pressure (and, similarly, of velocity, temperature or density) are caused by the rotation of rotor blades of turbines or compressors. These disturbances, created in one place, are transmitted up and down the flow channels and interact with pulsations created in other elements. As a result, all fields of pressure, velocity, temperature and density are not stable but pulsate in their own complicated way. Taking into account the nature of gas particle movements, the fluctuations and non-smoothness of flow parameters should be treated as a physically justified, normal behaviour. The pressure (or velocity) field fluctuates and is neither smooth nor stable in the whole flow part of the turbine.

3D calculations of flows in turbomachinery are treated as "state of the art" these days, but CFD codes still leaves much to be improved. Experimental verification of the numerical results plays a very important role, especially when very complicated unsteady flow phenomena are considered. Various CFD codes are used to predict flow performance in turbine stages, with different simplifications of the governing equations and different numerical methods. Usually, when unsteady calculations of turbine stages are performed, the interaction between the nozzles and the rotor blades is taken into account, while the flows in seal clearances are not considered at all. Moreover, the calculations are limited to only a few flow passages formed by a number of blades, and calculations of flows on the whole stage circumference are very rare. Thus, it is essential to understand how the results obtained by CFD tools correspond to the real flow behaviour.

2. Test rig

The experimental rig for the investigation of aerodynamic forces causing self-excited vibrations consists of an air-model turbine stage of the impulse type with moderately loaded prismatic nozzles and blades, equipped with a special measuring system. This stand and the measuring system were described in detail by Kosowski and Piwowarski [9, 10]. A longitudinal section of the turbine is shown in Figure 1.

MOST WIEDZY Downloaded from mostwiedzy.pl

The pressure distribution in the radial blade tip clearance was measured at 48 points, which were placed on the shroud circumference (Figure 2a) and in 4 cross-sectional planes located downstream along the turbine axis (Figure 2b). To investigate the nozzle trailing edge effect, pressure was measured at 22 points located at the shroud clearance inlet (Figure 2c). Additional traverse probes (not shown in the figure) were used for the measurement of pressure at the inlet and exit of the turbine stage.

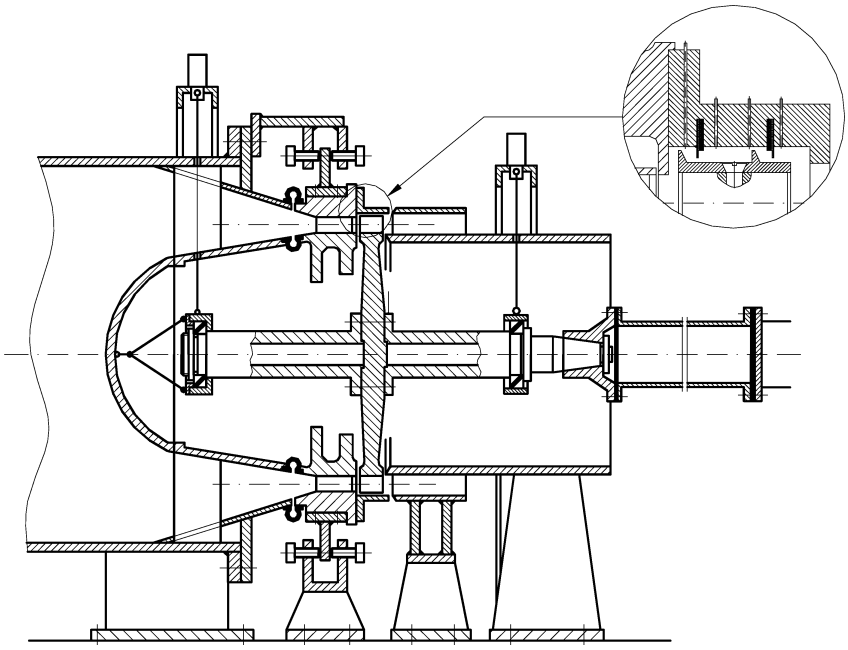

Figure 1. Longitudinal section of the model turbine

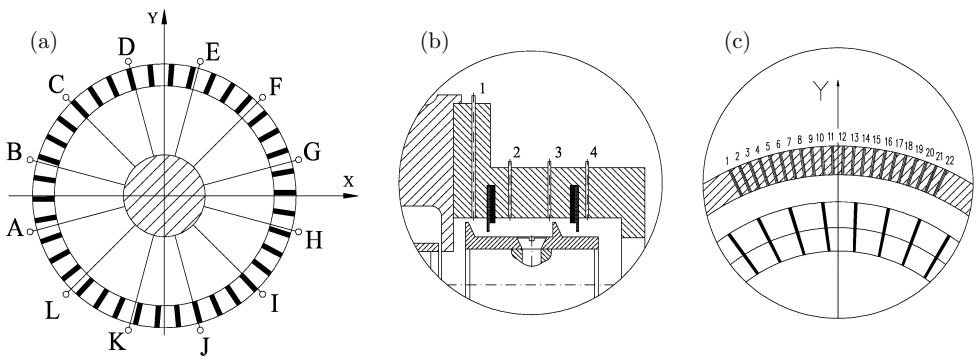

Figure 2. Location of measurement points

The pressure value was transmitted to a piezoresistive converter (tubes between the tap and the converter were used), where it was transformed into an electrical signal (the range of the converter was equal to 10 kPa, its natural frequency – about 1 kHz). This signal was amplified and transmitted to a PC extension card.

Pressure measurements were usually performed with a sampling time of 0.0002 s, which is relatively short, when compared with the pressure pulsation period equal

MOST WIEDZY Downloaded from mostwiedzy.pl

to 0.025s–0.1s. The recorded pressure signals were filtered and time-averaged by numerical methods. As mentioned above, pressure was measured at 48 points, and continuous pressure distribution in the shroud clearance was obtained by means of the cubic-spline method.

The signals of rotor displacement in vertical (Y) and horizontal (X) directions and the signal of the angular position of the rotor were also transmitted to the computer card, but they could equally well have been transmitted to a digital oscilloscope for online observations of the rotor trajectory, Figure 3. Displacement sampling time was equal to 1μs, *i.e.* at least 10 000 positions of the rotor during its single revolution were measured (at the maximum rotor speed $n = 6\,000$rpm).

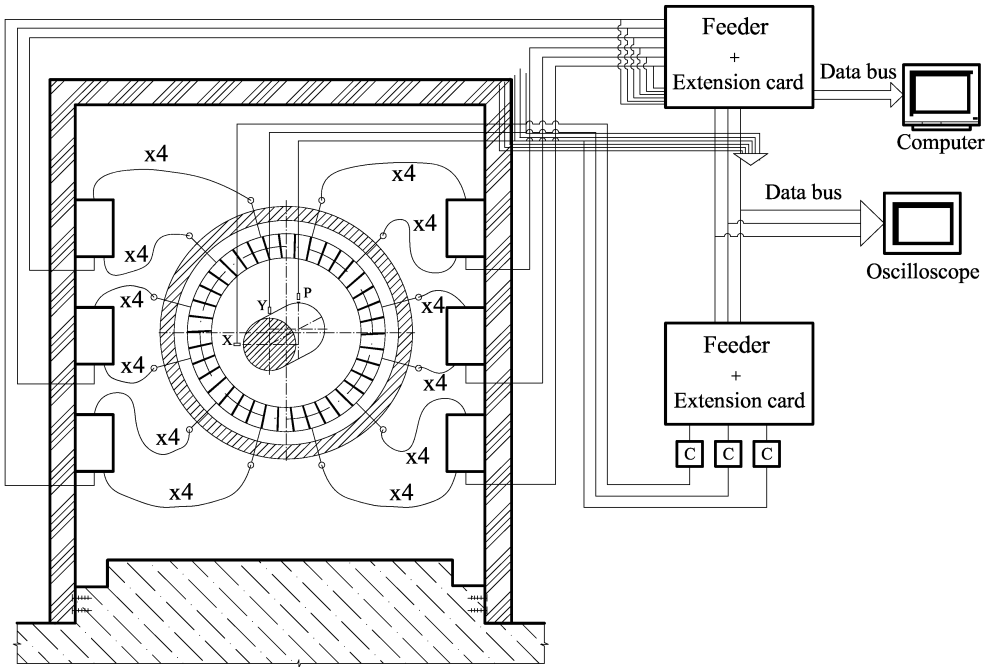

Figure 3. Scheme of the measuring system

The experimental stand enables one to measure pressure distribution in the blade tip clearance and to register the rotor trajectory for various rotor speeds and turbine loads. The investigations were carried out for several values of rotor speed: $\omega = 0$, $\omega = 311$rad/s, $\omega = 566$rad/s and $\omega = 645$rad/s. The pressure at the stage inlet was equal to 8, 9, 20 and 24kPa,respectively, above the atmospheric level.

3. Examples of experimental data

The investigations were carried out fof three values of rotor speed: $\omega = 311$rad/s, $\omega = 566$rad/s and $\omega = 645$rad/s (close to the turbine nominal speed). Pressure changes in time were observed for given constant parameters of turbine work. According to the obtained results, the pressure in the main flow and in the shroud clearances is not stable but pulsates. In Figure 4, we can see an example of pressure pulsations recorded at one of the points in the shroud clearance. Similar pulsations were measured

MOST WIEDZY Downloaded from mostwiedzy.pl

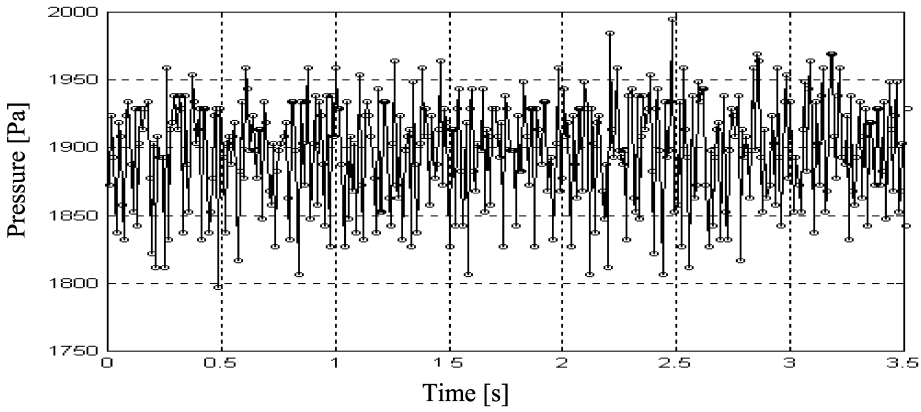

Figure 4. Pressure pulsations in the shroud clearance inlet

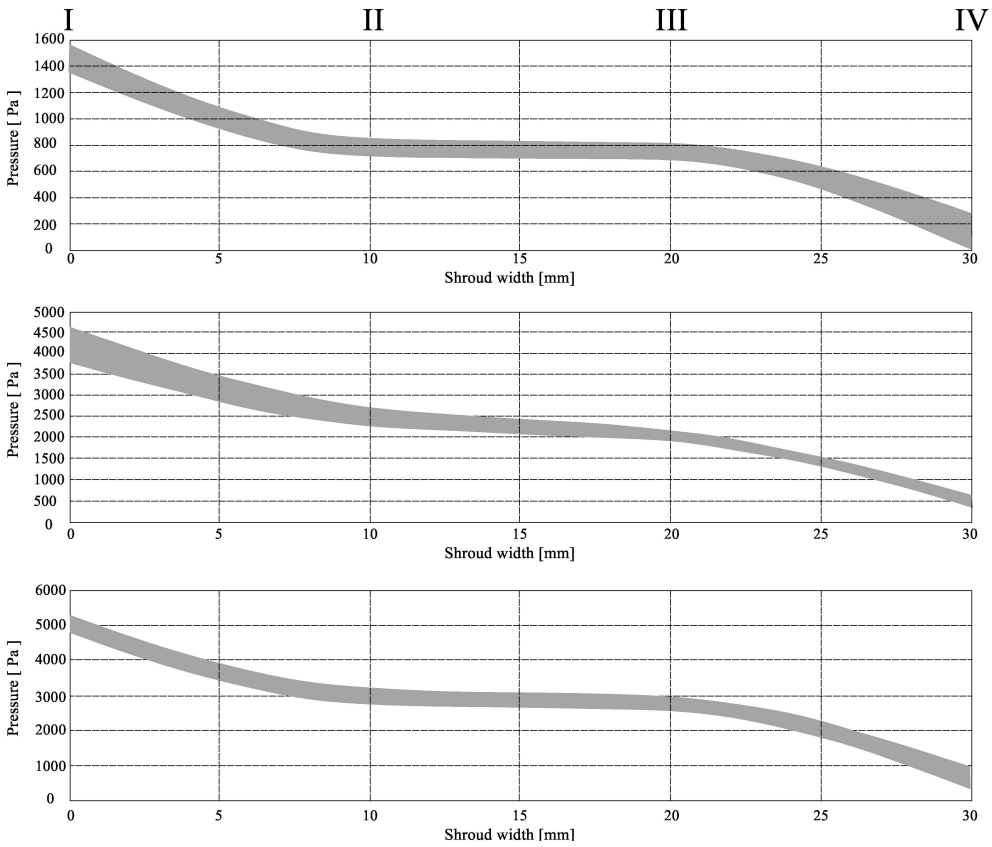

Figure 5. Pressure distribution along the shroud width for $\omega = 311$ rad/s (top), $\omega = 566$ rad/s (centre) and $\omega = 645$ rad/s (bottom)

at other points in the shroud gap, at the stage inlet and at the stage outlet. The frequency of pressure pulsations remained unchanged, while its amplitude decreased gradually along the tip clearance. The frequency of the pressure pulsations in the tip clearance was equal to the frequency of the pressure pulsation at the turbine stage

MOST WIEDZY Downloaded from mostwiedzy.pl

inlet and to the frequency of pressure pulsation at the turbine flow passage's exit. Figure 5 shows the range between maximum and minimum values of the measured pressure pulsations, presented as a function of the shroud width. The results obtained experimentally were compared with the results of the calculations performed with CFD codes. Figure 6 presents time-averaged pressure distribution in the blade shroud clearance for the various rotor speed values.

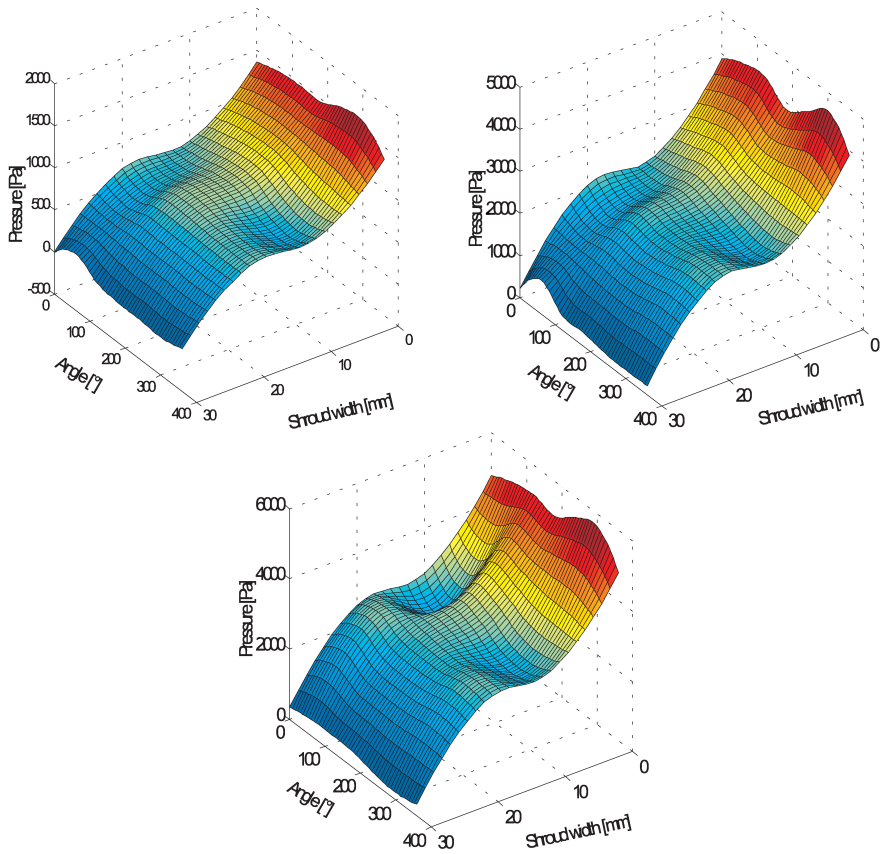

Figure 6. Pressure distribution in the shroud clearance for $\omega = 311$ rad/s (top-left), $\omega = 566$ rad/s (top-right) and $\omega = 645$ rad/s (bottom)

4. Method of calculations

The results of 3D calculations of an axial model turbine of the impulse type were performed using the FLUENT CFD code. To take turbulent behaviour into account the k-ε model was applied. Special attention was paid to the pressure field in the rotor blade shroud clearance. The Multiple Reference Frame method, the Mixing Plane method and the Sliding Mesh method were applied. All three use absolute reference frames for solving the governing equation for the stator and the relative reference frames for calculating flows in the rotor but, as a matter of fact, the first two of these methods should be treated as a steady-flow calculation technique. By applying the Multiple Reference Frame method we do not determine unsteady flows, but the

MOST WIEDZY Downloaded from mostwiedzy.pl

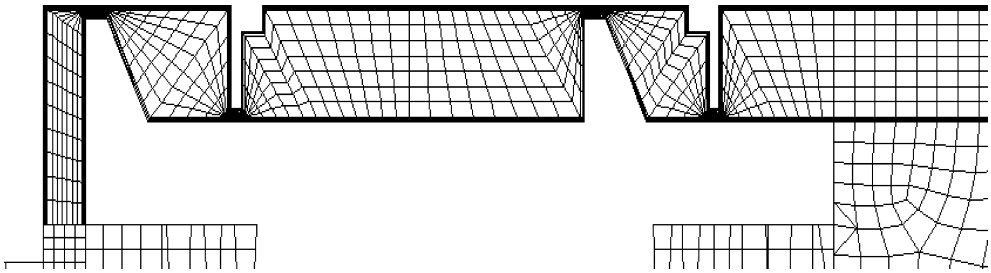

Figure 7. Example of a mesh of the shroud clearance

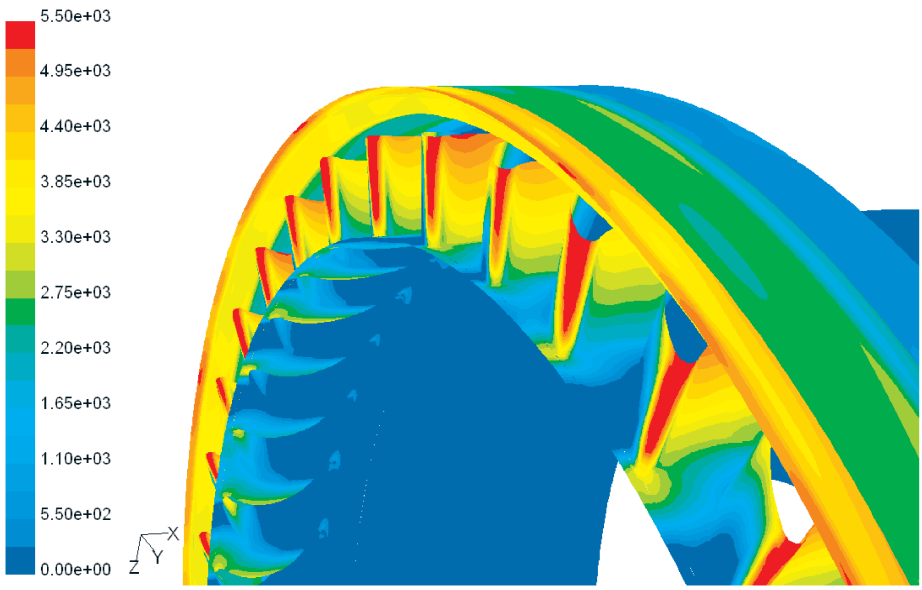

Figure 8. Pressure distribution in rotor blades and in the shroud clearance ($\omega = 566$ rad/s)

flow pattern for various relative rotor/stator positions. In the Mixing Plane method, the averaging of flow quantities along the circumference, when coupling between stationary and rotational frames is performed, leads to a decrease of the unsteadiness. The Sliding Mesh method guarantees that for each time step the effect of the displacement is taken into account and, generally, no averaging of unsteady behaviour takes place. Only the Sliding Mesh method is considered a suitable technique for unsteady flow analysis. At the same time, the unsteady calculations appear to be much more time-consuming and require much greater computational effort. The high cost of unsteady calculations results in the common use of steady calculations for predicting the flow parameters in turbomachinery. Therefore, it is very important to realize how precisely the results obtained with CFD tools describe the real flow pattern.

The geometry of the flow part of the turbine stage was modelled by a calculating mesh. It was divided into four blocks connected by means of various interfaces. Meshes of various types and configurations were used for the calculations. An example of a mesh is showed in Figure 7.

MOST WIEDZY Downloaded from mostwiedzy.pl

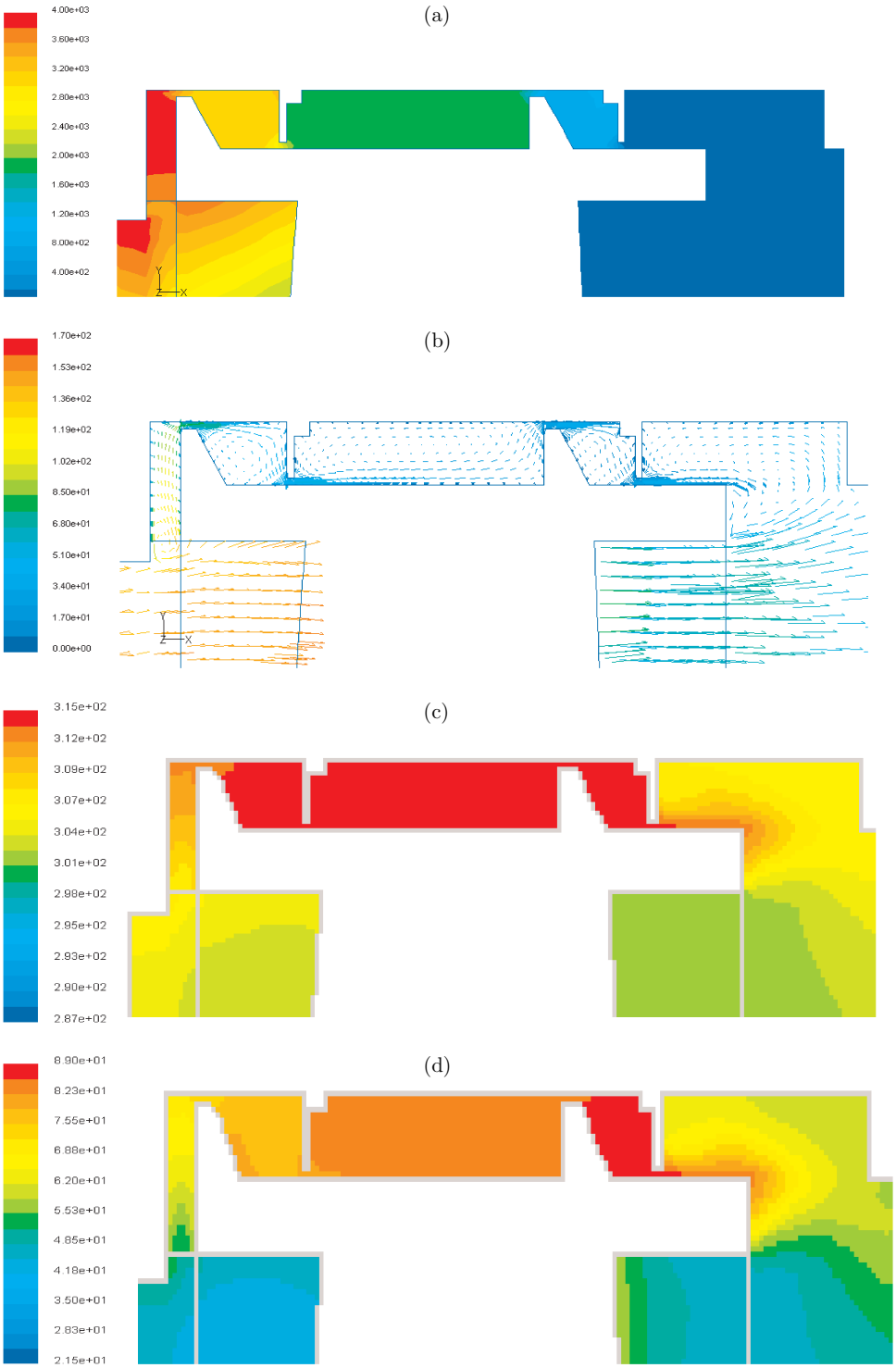

Figure 9. Examples of pressure distribution (a), velocity vectors (b), temperature distribution (c) and entropy distribution (d) in the shroud clearance

MOST WIEDZY Downloaded from mostwiedzy.pl

The types of meshes and their interfaces are described in detail, followed by numerical analysis, in part II of this paper, while some of the results of the calculations performed using these meshes and the Multiple Reference Frame method are presented in Figures 8 and 9. Figure 8 presents an example of calculated pressure distribution in the rotor blades and in the shroud clearance ($\omega = 566\,\mathrm{rad/s}$; for the sake of clarity, pressure distribution in the nozzles is not shown). Figure 9 shows examples of pressure distribution, velocity vectors, temperature distribution and entropy distribution in the shroud clearance axial section.

Calculations of flows in the model turbine were carried out for the variants of the inlet and outlet air parameters which had been measured experimentally. In this part of the paper, the experimental and calculating methods are described and illustrated with examples of the obtained results, below. This part serves as an introduction, followed by the analysis presented in parts II and III. A detailed numerical analysis, including various calculating methods (Multiple Reference Frame, Mixing Plane, Sliding Mesh), various types of meshes and their interfaces are presented in part II, while discussion and a comparison of the experimental and the calculated results is given in part III of this paper.

References

[1] Dietzen F J and Nordman R 1987 *ASME J. Tribology* **109** 388

[2] Tam L T, Przekwas A J, Muszynska A, Hendricks R C, Braun M J and Mullen R L 1988 *ASME J. Vibration, Acoustics, Stress, and Reliability in Design* **110** 315

[3] Tallman J and Lakshminarayana B 2001 *ASME J. Turbomachinery* **123** 314

[4] Kostyuk A G and Shan T 1997 *Teploenergetika* **7** 26 (in Russian)

[5] Xiao X, McCarter A A and Lakshminarayana B 2001 *ASME J. Turbomachinery* **123** 296

[6] McCarter A A, Xiao X and Lakshiminarayana B 2001 *ASME J. Turbomachinery* **123** 305

[7] Pfau A, Treibe M, Sell M and Gyarmathy G 2001 *ASME J. Turbomachinery* **123** 342

[8] Xiao X, McCarter A A and Lakshminarayana B 2001 *ASME J. Turbomachinery* **123** 296

[9] Kosowski K and Piwowarski M 2002 *ASME Paper* **2002-GT-30397**

[10] Kosowski K and Piwowarski M 2002 *ASME Paper* **2002-GT-30638**

MOST WIEDZY Downloaded from mostwiedzy.pl

MOST WIEDZY Downloaded from mostwiedzy.pl

TQ307A1E/318 10 X 2003 BOP s.c., http://www.bop.com.pl