GDAŃSK UNIVERSITY OF TECHNOLOGY

Journal of Polish CIMEEAC

Faculty of Ocean Engineering & Ship Technology
GDAŃSK UNIVERSITY OF TECHNOLOGY

SIMPLIFIED METHOD OF WATER COOLED EXHAUST SYSTEM DESIGN AND PERFORMANCE ASSESSMENT

Czesław Dymarski
Gdańsk University of Technology
Faculty of Ocean Engineering and Ship Technology
Narutowicza 11/12 str., 80-950 Gdańsk, Poland
tel. +48 58 3471608, fax +48 58 348 6372
E-mail: cpdymars@pg.gda.pl

Marek Narewski
Polish Register of Shipping
Gen. J.Hallera 126 Av, 80-463 Gdańsk, Poland
Tel. +48 58 7511292, fax +48 58 3460392
E-mail: marek.narewski@prs.pl

Abstract

The water cooled exhaust systems are not often used onboard ships. Prime goal is to lower temperature of exhaust gas from main propulsion and auxiliary engines to the defined limit. The design of such systems require detailed analysis of propulsion system operational parameters to meet designer expectations. The paper outlines the cooled exhaust system design problems in specific application. The simplified method of evaluation of expected cooling water flow requirements has been developed. Based on marine diesel engines test bench data, the results of short analysis of cooling water demand for two different diesel engines are presented. A simplified engineering approach may be useful for assessment of exhaust gas cooling system performance in commercial application like rescue vessels wet exhaust design or exhaust gas cleaning systems.

Keywords: *diesel engine, exhaust gas, water cooling, thermal signature suppression*

1. Introduction

In majority of applications of marine diesel engines used for propulsion or for electric power generation exhaust gas treatment is done to limit NOx pollution resulting from the combustion of fuel oil. Actually environmental protection measures are taking place both in commercial and military applications. Exhaust gases generated by main propulsion and auxiliary power sources are cooled onboard of certain warships. The water or air cooled systems are used to substantially decrease temperature of exhaust gases in order to minimize thermal signature of the naval vessels. Technical literature provides little information about the systems used to cool down exhaust gases generated by gas turbines as well as by diesel engines. In case of bigger naval vessels, fitted with gas turbines the exhaust cooling systems are of substantial size and are technically complicated designs due to the amount of heat generated. The design guidance and detailed data about system construction and operational performance are not widely available and amount of detailed engineering references is very limited.

2. Water cooled exhaust - System goals and design outline

The system used to decrease temperature of exhaust gases is integral part of exhaust piping. Exhaust gases from engine exhaust manifold are flowing through silencer and after later through special chamber where the water is injected and later the water-gas mixture is removed overboard. Generally, water cooled exhaust gas systems can be divided into two main groups depending on application area – commercial and naval.

2.1 Commercial systems

An example of commercial system is the case of rescue vessel fitted with exhaust gas piping system designed to lead exhaust gases below ship waterline. The purpose of such solution is to cool down substantially the exhaust gases from propulsion engines and gensets in order to prevent survivors in water to have burns.
Another example of commercial application of exhaust gas cooling is the exhaust gas treatment used in a process of gas recirculation (EGR) in order to decrease the amount of nitrogen oxides generation by propulsion and auxiliary engines. The equipment for EGR or EGCS systems is offered commercially. On the other hand, the number of publications available describing details of exhaust gas cooling system design and performance is also limited. The issue of cooling exhaust gases for better environmental performance is not subject of this paper.

2.2 Naval Vessel Systems

In naval ships design the reasons for exhaust gases cooling is to suppress and control IR signature of the vessel in order to reduce ship detection probability and tracking by enemy. Generally, cooling of exhaust gases could be done by:

- mixing exhaust gases with air (applicable to engines with smaller power e.g. gensets.
- mixing exhaust gases with seawater injected into separate tank – Fig. 1, Fig. 2.

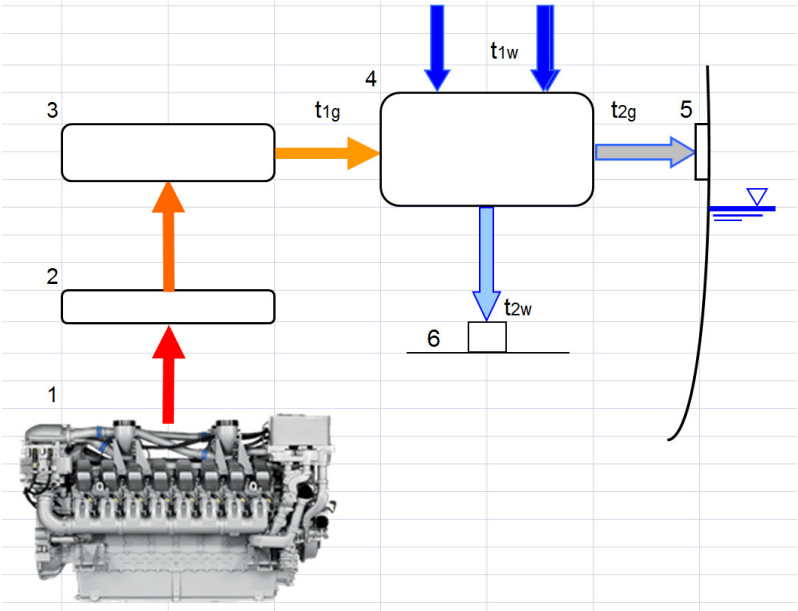

Fig. 1. Example of exhaust gas water cooling system diagram. Items: 1 – diesel engine, 2 – exhaust gas collector, 3 – silencer, 4 – side valve, 6 – bottom valve, t_{1g} – temperature of exhaust gases, t_{2g} – temperature of cooled exhaust gases, t_{1w} – temperature of cooling water, t_{1w} – temperature of not evaporated water

MOST WIEDZY Downloaded from mostwiedzy.pl

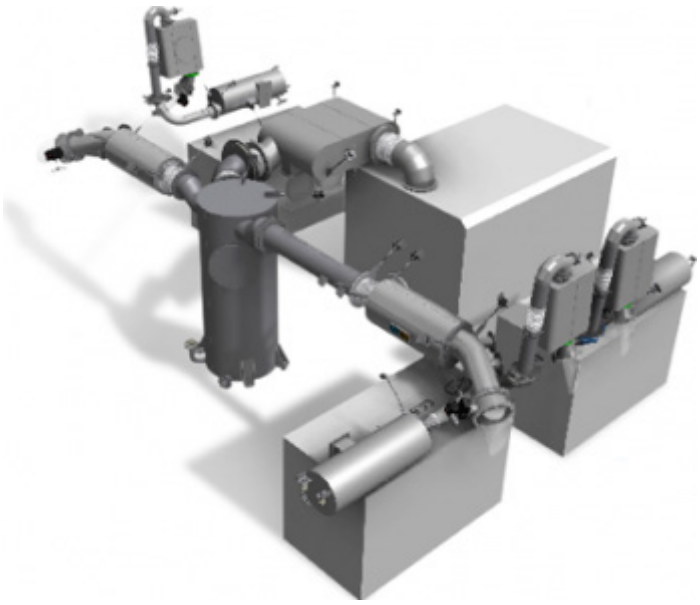

Fig. 2. Example of exhaust gas cooling system, [Source: internet]

- mixing of exhaust gases with sea water in a number of vessels or specially developed cooling structures – particularly used on bigger vessels with gas turbines Fig. 3.

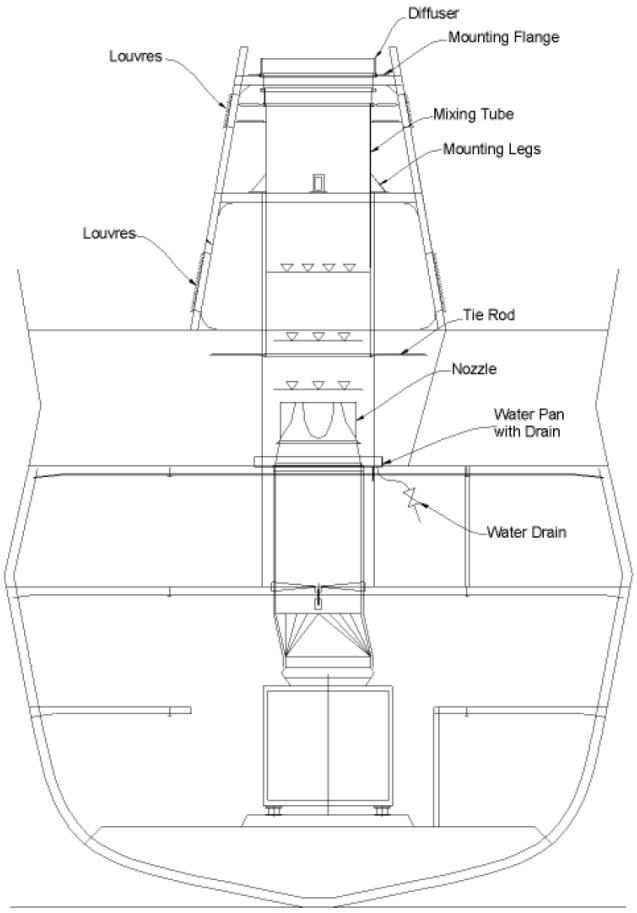

Fig. 3. Exhaust gas cooling system of large naval vessel [1]

For modern warship, particularly with gas turbine propulsion the key to the effective cooling solution is an advanced hybrid Eductor/Diffuser system which combines passive cooling air entrainment with active water injection. This permits very low exhaust gas exit temperatures without the associated high engine back pressure. It is major requirement now, that new ship designs must include detailed signature management studies and in the end vessels are to be equipped with sophisticated IR

MOST WIEDZY Downloaded from mostwiedzy.pl

suppression systems, for both the engine exhausts and the solar-heating of the shipsurface [2].

3. Principles of exhaust gas cooling process

The simplified single engine exhaust gas cooling system with water injection into cooling chamber is presented in Fig 1. The principle o operation is based on a process of outboard sea water mixing with a stream of exhaust gases in special chamber, The chamber is placed after silencer and is connected to exhaust piping that leads cooled exhaust gas stream outside machinery room – in practice overboard.
In case when there is a need to cool down exhaust gases from other engines additional systems are being installed so the system is usually duplicated.
The main problems that need to be solved during the systems design are:

- determination of system dimensions and optimal performance parameters,
- the system arrangement within machinery spaces,
- construction technology (e.g. piping insulation, welding of thin special steel piping),
- corrosion avoidance – e.g. the most effective is use of duplex steels for piping, pressure vessels, valves and fittings.

It must be mentioned, that system design and construction as well as later integration in real machinery room structure must take into account all customer specific requirements. The some of those problems must include also ability to cope with vibrations and shocks that are considered in foreseeable naval vessel operational scenarios.

Some information about the system operation and performance can be found in publication done by TNO [1]. The process of cooling takes place in a special chamber where the water cooling is conducted by a spray of small water droplets at 20 °C that are injected into the hot exhaust gas stream. It is assumed that the water particles evaporate immediately, even before the droplets increase their temperature. In reality, the evaporation in the cooling process will be a more continuous process, where the cooling water heats up and at the same time evaporates at all temperatures between 20°C and 100°C. However, to be in line with principles of physics in the process description we must assume the presence of conservation of energy principles, and the total energy extracted from the exhaust gas plume is to be the same for a given end temperature.
The temperature of the exhaust gases cooled by water evaporation reaches an equilibrium when the mix of exhaust gases and water vapour is fully saturated. Evaporation is then no longer possible and the temperature cannot further decrease by the evaporation of water. For this reason some of the lowest temperatures cannot be reached in practice. Theoretically the exhaust gases can be cooled further by mixing the gases with cold water, without evaporation. However, this process is much less efficient in cooling and requires a much larger water flow.

4. Design and engineering problems

4.1 Selection of Materials

The water cooled exhaust system is composed of pipes and fittings connected in a way to lead exhaust gases through silencer and gas cooling unit where water is injected into stream of hot exhaust gas. High temperature (in range of 300-500°C and continuous contact with salt water require highly corrosion resistant materials. Typical solution is using austenitic steel like SS316L and in certain cases other steels like 254 SMO – all combined with suitable welding and after-treatment backed up by detailed process quality control procedures,

4.2 Weight

The typical exhaust gas cooling system for one engine is composed of pipes, fittings, silencer, cooler and ship side valve. Weight limitation is typical issue for all naval ships. The way to control the system weight is the use of materials with excellent corrosion properties to have minimal corrosion allowances. The best situation is when the piping thickness and allowances are selected for the whole ship life.

MOST WIEDZY Downloaded from mostwiedzy.pl

4.3 Dimensions and 3-D shaping

System dimensioning is critical as in most cases there is limited amount of space in machinery room. Additional insulation is needed for piping and hot surfaces to limit heat radiation into machinery room.

4.4 Resistance to operational conditions

In case of naval vessels, the system is to be integrated in a way that allows for reliable operation during operational loads that may be expected during ship operation in battle space.
Dedicated suspensions with rubber shock absorbers are part of the exhaust piping that allows piping thermal expansion and displacement in a way of keeping the necessary integrity to provide the propulsion system being operable in all foreseeable operational conditions. The system design in area of side shell must secure gas and water tightness as well suitable engines protection against water ingress.

4.5 Operational testing

The system operational simulation using CFD methods require dedicated software, usually not available for the end user. Instead the system performance should be tested during sea trials after fixing all machinery and control systems onboard. It is recommended to test the system in the whole range of the engine loading and speed range. Performance of the exhaust cooling should be checked by measurement of exhaust gases temperature, injected water flow and related pressures in all selected parts of the system piping. The use of thermographic techniques will allow to determine the temperature of gas plume near in gas outlet area.

5. The modeling system – simplified model

One of the important aspects of the system operational performance is the required sea water flow able to provide sufficient cooling to the temperature level defined by the end user. In the principle of operation, the effectiveness of mixing of exhaust gases with water depends on certain design input data like the number of water injection nozzles, size of exhaust cooling tank.

For the purpose of this analysis the system operation model is limited to cooling exhaust gases by sea water without complex analysis of number of nozzles, tank size, heat losses in piping due to radiation through pipe walls.

Underneath, it is presented a simplified mathematical model used to calculate a required volume flow of cooling water to the cooling of marine diesel exhaust gases.

$$m_w = f(m_g , C_{ps}(t_{1g}) , r_w(t_{av}) , t_{1g} , t_{2g})$$

where: - m_w – cooling water mass flow [kg/s],
- m_g – exhaust gases mass flow [kg/s],
- C_{ps} – specific heat of the exhaust gases [J/kg/K],
- r_w – heat of vaporization of water [J/kg],
- t_{1g} – temperature of exhaust gases at the inlet to the separator [°C],
- t_{1w} – temperature of cooling water at the inlet to the separator [°C],
- t_{2g} – temperature of cooled exhaust gases at the outlet of the separator [°C],
- t_{av} – average temperature of the cooling water evaporation [°C]

$$t_{av} = 0,5*(t_{2g} – t_{1w})$$

Calculations of the necessary cooling water flow as a function of cooled exhaust gases temperature has been made for two marine diesel engines on the basis of available test bench data including: the mass flow m_g, temperature t_{g1}, chemical composition of exhaust gases and cooling water temperature t_{1w}. The results of calculations for the main diesel engine with a nominal power P= 1000 kW is shown in Fig. 4, while the results the auxiliary engine with a power of P = 325 kW – are presented in Fig. 4.

MOST WIEDZY Downloaded from mostwiedzy.pl

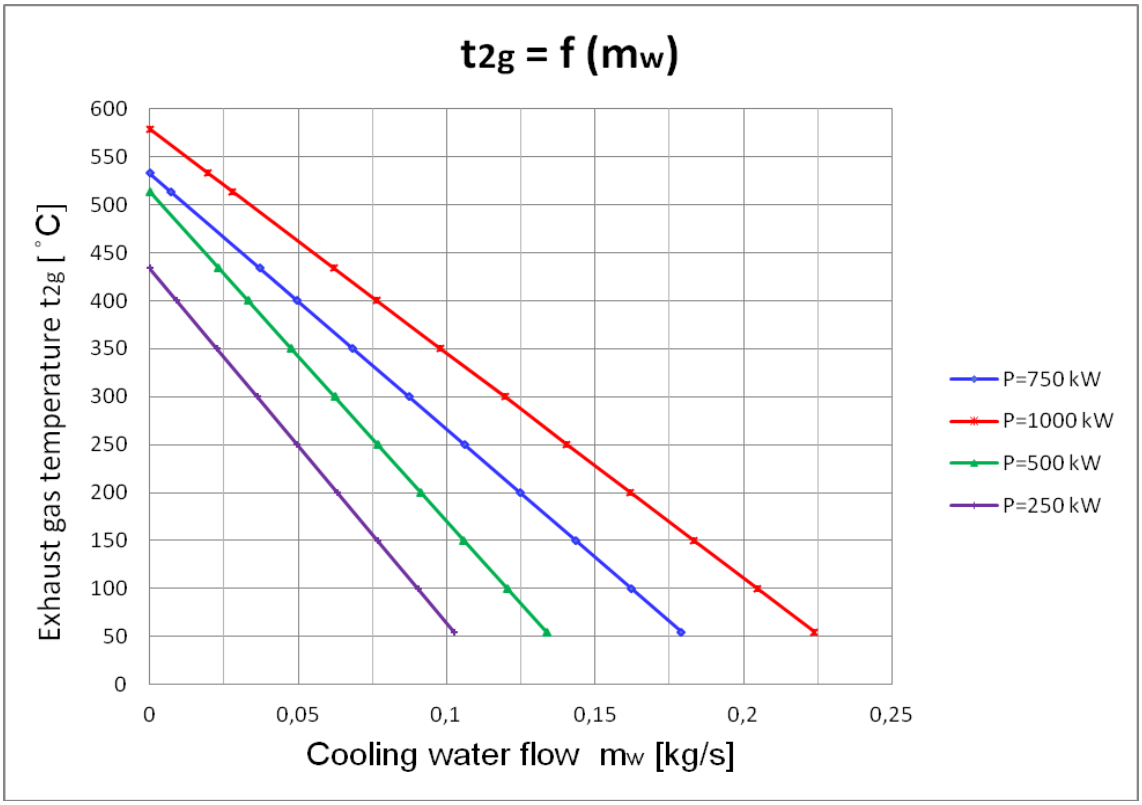

Fig. 4. Cooled exhaust gases temperature as a function of cooling water flow for main diesel engine of 1000 kW nominal nominal power for four values of power. Temperature of cooling watr t_{1w} = 20 ˚C. The final temperature of cooled exhaust gases t_{2g} = 55 ˚C

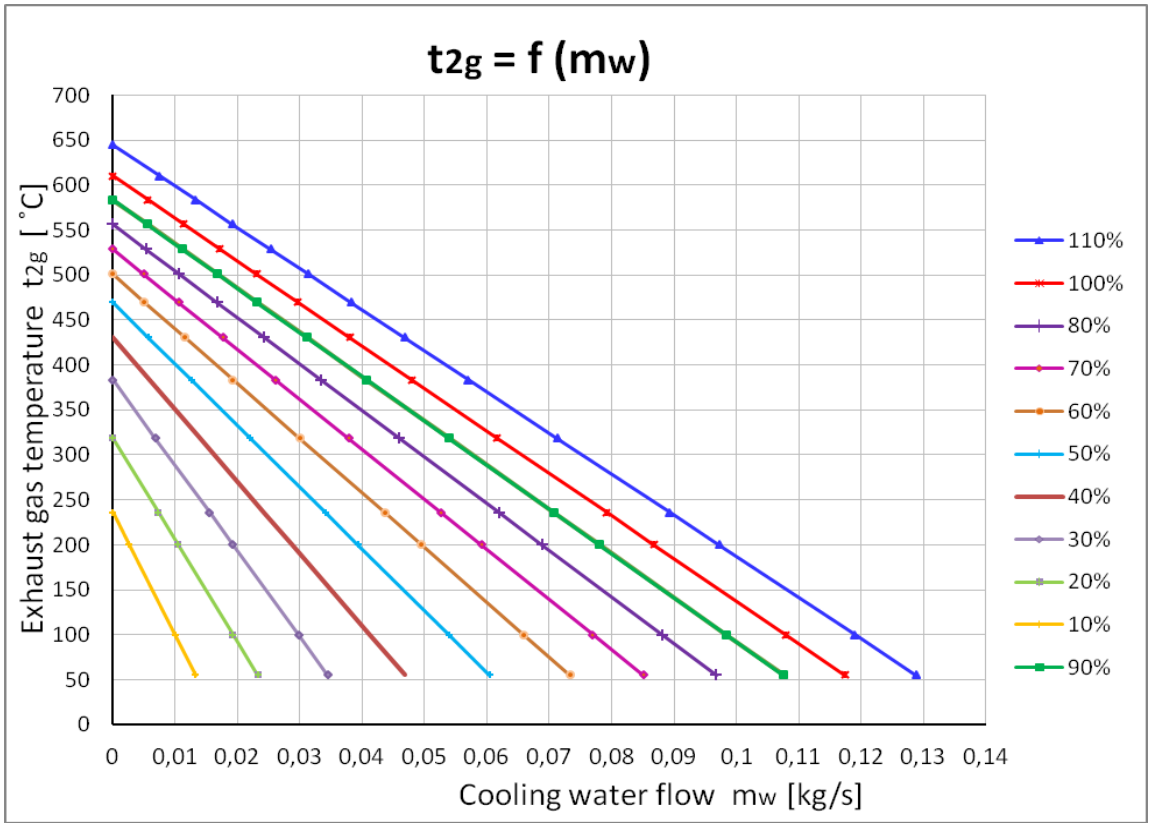

Fig. 5. Cooled exhaust gases temperature as a function of cooling water flow for auxilary marine diesel engine of 325 kW nominal nominal power for eleven values of power. Temperature of cooling watr t_{1w} = 20 ˚C. The final temperature of cooled exhaust gases t_{2g} = 55 ˚C

MOST WIEDZY Downloaded from mostwiedzy.pl

6. Summary

The simplified method of valuation of the system performance may be used for initial assessment of the system size for preliminary design.
The detailed analysis is needed in case of design of the water cooled exhaust system control software linked with engine control software.
The measurements of specific system parameters will be able to provide realistic data that could allow for more detailed simulations to be carried out in preliminary and detailed design of the naval vessels.

Bibliography

[1] Hiscoke B, P.Eng., IR Suppression –Exhaust Gas Cooling by Water Injection, W.R. Davis Engineering Limited, Source: Internet

[2] Schleipen H.M.A, Neele F.P. ,Ship exhaust gas plume cooling, TNO, Proceedings of SPIE, Vol 5431, (SPIE Bellingham 2004)

[3] Fijałkowski S.: Analiza możliwości ograniczania promieniowania podczerwonego emitowanego przez strukturę konstrukcyjną śmigłowca – strefę silnikową i odlotowe gazy spalinowe. Opracowanie w ramach badań statutowych nr S4/M/2006-II zad 2.3 Politechnika Lubelska, Lublin 2006.

MOST WIEDZY Downloaded from mostwiedzy.pl