Subadditivity of the minimum output entropy and superactivation of the classical capacity of quantum multiple access channels

Ł. Czekaj*

Faculty of Applied Physics and Mathematics, Gdańsk University of Technology, 80-952 Gdańsk, Poland and National Quantum Information Center of Gdańsk, 81-824 Sopot, Poland

(Received 31 December 2010; published 7 April 2011)

We study subadditivity of the minimum output entropy ($H_{\min}$) of quantum multiple access channels (MACs). We provide an example of violation of the additivity theorem for $H_{\min}$ known in classical information theory. Our result is based on a fundamental property of MACs, i.e., independence of each sender. The channels used in the example can be constructed explicitly. On the basis of subadditivity of $H_{\min}$ we also provide an example of extremal superadditivity (superactivation) of the classical capacity region of MACs.

DOI: 10.1103/PhysRevA.83.042304 PACS number(s): 03.67.Hk, 89.70.Kn

Using quantum resources such as quantum entanglement [1] in quantum information theory [2] leads to a new class of effects, known as *quantum activation*, which are impossible in classical information theory [3]. Some examples of quantum activation are (i) superadditivity of the classical capacity $\mathcal{C}$ in the fundamental case of one-to-one quantum channels [4] where the transmission of entangled states leads to capacities larger than using product states; (ii) nonlocality effect for classical capacity region $\mathcal{R}$ of quantum multiple access channels [5,6] where entanglement used by first sender increases the maximal rate of another (R_2) without increasing the maximal total rate $R_1 + R_2$ (the effect can be quite strong as shown in [7]); and (iii) superactivation, i.e., extremal superadditivity, of the quantum capacity $\mathcal{Q}$ for one-to-one channels where two quantum channels with zero quantum capacities working together allow for transmission of qubits [8]. Quantum activation can also be observed for other types of resources. An important example was demonstrated in Ref. [9] for Gaussian channels [10] where the crucial resource is power available for senders. The effect was shown by squeezed states transmission.

This paper addresses the subadditivity of the minimum output entropy $H_{\min}$ and quantum activation of the classical capacity region $\mathcal{R}$ of the entanglement breaking [11] multiple access channels (MACs) and it continues the research started in Ref. [5]. The effect of the subadditivity of $H_{\min}$ is manifested when the transmission of entangled states produces lower entropy than the transmission of any product states. The question of subadditivity of $H_{\min}$ of quantum one-to-one channels appears to have been first considered in print in Ref. [12]. In Ref. [13] the equivalence between the additivity of $H_{\min}$ and classical capacity χ was stated. For certain classes of Gaussian channels, the additivity of $H_{\min}$ is related to the question of whether the transmission of Gaussian states introduces minimum entropy to the output state [14]. Finally, an example of subadditivity of $H_{\min}$ for quantum one-to-one channels was first provided in Ref. [4] and explored further in [15]. Hastings' channels seem to be very hard to explicitly construct since this task requires a search through the set of unitary matrices. Here we study the subadditivity of $H_{\min}$ in the realm of MACs. The setup we present is intrinsically MAC and cannot be reduced to the setup of one-to-one channels, i.e., to the case studied by Hastings. The advantage of our approach is the existence of effective algorithms allowing the explicit construction of the channels we present. It should allow a better understanding of the mechanism behind the subadditivity effect. The subadditivity of $H_{\min}$ leads us to the quantum activation of $\mathcal{R}$. The example provided here exhibits superadditivity of the total rate R_T. We construct two sequences of channels $\{\tilde{\Gamma}_A^{(\delta)}\},\{\tilde{\Gamma}_B^{(\delta)}\}$ and study its parallel setup $\{\tilde{\Gamma}_A^{(\delta)}\} \otimes \{\tilde{\Gamma}_B^{(\delta)}\}$. Without using entanglement in communication, $R_T \to 0$ as $\delta \to 0$. On the other hand, using entangled states allows one to achieve $R_T = 1$ for each δ. This can be viewe as a superactivation effect, since entanglement strongly activates channels with almost zero capacities.

The superadditivity of $\mathcal{C}$ in entanglement breaking MACs suggests qualitative differences between bipartite and multipartite communication since it cannot occur for entanglement breaking one-to-one channels. It was first pointed out in Ref. [7]. Superadditivity was shown for the entanglement breaking MACs cooperating with an identity channel (which is not entanglement breaking). Here we move one step further and show that very strong superadditivity also takes place if we use only entanglement breaking MACs.

The paper is organized as follows: First we provide definitions and theorems used in the main part of the paper. We stress the explanation of the idea of a randomness extractor which is of paramount importance to further considerations. Then we present the main results, i.e., the subadditivity of $H_{\min}$ and the superactivation of the classical capacity of the MACs.

I. BACKGROUND

A *quantum channel* Γ is a linear, completely positive and trace preserving map from density matrices to density matrices $\rho \mapsto \Gamma(\rho)$ [2] and it models the transmission of quantum states in the presence of noise. An *entanglement breaking channel* is a quantum channel which cannot be used to create entanglement between parts participating in communication [11]. It can be presented in the form of a measurement followed by a state preparation. In quantum *multiple access channels* there are

*lczekaj@mif.pg.gda.pl

 ©2011 American Physical Society

at least two senders transmitting to one receiver. Each sender sends his state independently of the other, i.e., their inputs are uncorrelated. For the case of two senders, a MAC acts as a map:

$$\rho_1 \otimes \rho_2 \mapsto \Gamma(\rho_1 \otimes \rho_2), \tag{1}$$

where state ρ_1 (ρ_2) is sent by the sender S_1 (S_2).

We will denote as $\Gamma_A \otimes \Gamma_B$ a *parallel setup* of channels Γ_A,Γ_B. It means that each sender has access to one input of the channel Γ_A and one input of the channel Γ_B. They can transmit any states through their inputs where the first part of the transmitted states goes through Γ_A and the second through Γ_B. Channels are used synchronously and the receiver has access to the outputs of both channels.

A quantum channel can be used for the transmission of either classical [16] or quantum information [17]. In the *transmission of classical information*, senders encode classical messages $\{i\},\{j\}$ into *code states* transmitted through the channels $i \mapsto \rho_1^{(i)}, j \mapsto \rho_2^{(j)}$. Senders and receivers know the ensemble of code states (i.e., the set of code states and the probabilities the states are transmitted with) $\{p_1^{(i)},\rho_1^{(i)}\}$, $\{p_2^{(j)},\rho_2^{(j)}\}$ but one sender does not know which state is transmitted by the other sender at a given time. The receiver performs a measurement on the output state and based on its result tries to infer which message (i,j) was transmitted.

For a given protocol, the amount of classical information which can be transmitted through the MAC with arbitrary small error probabilities in the limit of long code words is the pair of rates (R_1,R_2). R_1 and R_2 denote the rates for senders S_1 and S_2, respectively. The rates are achievable simultaneously. The set of all achievable pairs of rates form the Holevo-like *classical capacity region* $\mathcal{R}(\Gamma)$. For a given ensemble of code states one can define the state $\rho = \sum_{i,j} p_1^{(i)} p_2^{(j)} e_1^{(i)} \otimes e_2^{(j)} \otimes \Gamma(\rho_1^{(i)} \otimes \rho_2^{(j)})$, where $\{e_1^{(i)}\}$ $\{e_2^{(j)}\}$ are projectors on the standard basis of the Hilbert space of the input controlled by S_1 (S_2). The capacity region $\mathcal{R}(\Gamma)$ is obtained as a convex closure of all rates (R_1,R_2) such that there exists ρ for which the set of inequalities is fulfilled:

$$R_1 \leqslant I(S_1 : R|S_2), \tag{2}$$

$$R_2 \leqslant I(S_2 : R|S_1), \tag{3}$$

$$R_T = R_1 + R_2 \leqslant I(S_1,S_2 : R), \tag{4}$$

where $I(S_1,S_2 : R) = H(\rho_{S_1,S_2}) + H(\rho_R) - H(\rho_{S_1,S_2,R})$ and $I(S_1 : R|S_1) = \sum_j p_j I(S_1 : R|S_2 = j)$. $H(\rho) = -\mathrm{tr}[\rho \log \rho]$ is the von Neuman entropy. R_T denotes the total rate and is defined as $R_T = \sum_i R_i$. The shape of the capacity region $\mathcal{R}(\Gamma)$ and its achievability by code words that are not entangled over multiple channel uses was first shown in [18,19]. We shall denote "single shot" formula $\mathcal{R}^{(1)}(\Gamma) = \mathcal{R}(\Gamma)$ and $\mathcal{R}^{(n)}(\Gamma) = \frac{1}{n}\mathcal{R}(\Gamma^{\otimes n})$ for the situation where code states can be n-particle entangled states. The interesting case is that of the regularized capacity region $\mathcal{R}^{(\infty)}(\Gamma) = \lim_{n\to\infty} \frac{1}{n}\mathcal{R}(\Gamma^{\otimes n})$, which expresses the upper bound for the capacity region which can be achieved due to quantum entanglement.

For a MAC Γ with n senders we define the *minimum output entropy* $H_{\min}(\Gamma)$ as

$$H_{\min}(\Gamma) = \min_{\rho_1,\ldots,\rho_n} H[\Gamma(\rho_1 \otimes \cdots \otimes \rho_n)], \tag{5}$$

where ρ_i belongs to the input space of the sender S_i. Minimization runs over all states from the input space of each sender. Due to the concavity of $H(\rho)$, it is sufficient to minimize only over pure states.

In the classical setup senders transmit only product states from orthogonal bases of the input spaces of Γ_A and Γ_B. By the properties of the von Neuman entropy, we can state for MACs the additivity theorem

$$H_{\min}(\Gamma_A) + H_{\min}(\Gamma_B) = H_{\min}(\Gamma_A \otimes \Gamma_B). \tag{6}$$

The existence of entangled states in the input space of the $\Gamma_A \otimes \Gamma_B$ extends the set we minimize $H_{\min}$ over and makes the additivity theorem invalid in the quantum setup. The *subadditivity* of $H_{\min}$ occurs if transmission of the entanglement state through $\Gamma_A \otimes \Gamma_B$ produces lower entropy than the sum of $H_{\min}$ of each channel working separately.

The additivity theorem for MACs can be stated analogically:

$$\mathcal{R}(\Gamma_A) + \mathcal{R}(\Gamma_B) = \mathcal{R}(\Gamma_A \otimes \Gamma_B). \tag{7}$$

Here we use the geometrical sum of the sets in Euklides space. In the parallel setup of quantum MACs we can use entangled states as code words. Superadditivity of the classical capacity regions $\mathcal{R}$ takes place if there exists a protocol using entangled code states with classical capacity region $\mathcal{R}_{\mathrm{ent}}(\Gamma_A \otimes \Gamma_B)$ such that for each protocol using only product code states with $\mathcal{R}_{\mathrm{prod}}(\Gamma_A \otimes \Gamma_B) = \mathcal{R}(\Gamma_A) + \mathcal{R}(\Gamma_B)$ occurs $\mathcal{R}_{\mathrm{prod}} \subset \mathcal{R}_{\mathrm{ent}}$. Superactivation describes the situation when $\mathcal{R}_{\mathrm{ent}}$ is huge in comparison with $\mathcal{R}_{\mathrm{prod}}$.

In what follows, we shall use generalized Bell states [20] in the form

$$|\psi_{\alpha,\beta}\rangle = \frac{1}{\sqrt{D}} \sum_{l=0}^{D-1} \exp\left(\frac{2\pi i}{D}\alpha l\right) |l\rangle|l+\beta\rangle, \tag{8}$$

where $\alpha,\beta \in \{0,D-1\}$ are indices. The states belong to the space $\mathbb{C}^D \otimes \mathbb{C}^D$. For the state $|\mu\rangle = \sum_i \mu_i|i\rangle$, where $\{|i\rangle\}$ is the standard basis, we will write $|\mu^*\rangle = \sum_i \mu_i^*|i\rangle$ and $D = 2^d$.

For two random variables X,Y with equal support the statistical distance is defined as

$$\mathrm{dist}(X,Y) = \frac{1}{2} \sum_{e\in\sup(X)} |p_x(e) - p_y(e)|. \tag{9}$$

We denote by F_m an m-bit random variable with a flat distribution over its support.

Proposition 1. For a binary random variable X if $\mathrm{dist}(X,F_2) = \epsilon$ then $1 - H(X) = (2/\ln 2)\epsilon^2 + O(\epsilon^4)$ and for $\epsilon \in (0,0.5)$ we have $1 - H(X) \leqslant 4\epsilon^2$.

Proof: This follows directly from a Taylor series expansion.

A classical *multiple source randomness extractor* is a function which distills entropy from independent "weak random sources" into random variables with almost flat distribution. We use the word "classical" to distinguish from situations where randomness is obtained on the base of quantum effects.

MOST WIEDZY Downloaded from mostwiedzy.pl

Usability of a random source in a randomness extraction process is characterized by the *min-entropy*: H^∞ [21,22] defined as

$$H^\infty(X) = \min_{x \in \sup X} -\log\, p(x). \tag{10}$$

Definition 1. Multiple source randomness extractor [23]: A function $f_{\text{ext}} : \{0,1\}^{n\times l} \mapsto \{0,1\}^m$ which satisfies

$$\text{dist}(f_{\text{ext}}(X_1,\ldots,X_l), F_m) \leqslant \epsilon \tag{11}$$

for every independent n-bit source $X_1,\ldots,X_l$ with $H^\infty(X_i) \geqslant k$ is called an l-source extractor with k min-entropy requirement, n-bit input, m-bit output, and ϵ-statistical distance.

Theorem 1. Extractor existence [23]: Let $m < k < n$ be integers and let $\epsilon > 0$. If $k > \log n + 2m + 2\log(1/\epsilon) + 1$ holds, then there exists a two-source extractor $f_{\text{opt}} : \{0,1\}^{n\times 2} \to \{0,1\}^m$ with k-entropy requirement and distance ϵ. The extractor can be computed in time proportional to $2^{5n^2 2^{2k}}$.

II. SUBADDITIVITY OF H_{min}

Here we provide two families of MACs, $\{\Gamma_A^{(\delta)}\}$ and $\{\Gamma_B^{(\delta)}\}$, indexed by δ, which exhibit the subadditivity of $H_{\min}$ for $\delta < 1/2$.

The channels $\Gamma_A^{(\delta)}, \Gamma_B^{(\delta)}$ consist of four independent d-qubit inputs $X_1^A,\ldots,X_4^A$ ($X_1^B,\ldots,X_4^B$) and one-qubit output Y^A (Y^B). The inputs X_i^A and X_i^B are controlled by the sender S_i. The size of the inputs depends on δ as follows: $d = \lceil 2\log(1/\delta) + 12\rceil$. Both channels are based on the same scheme (see Fig. 1) so we will describe the channel Γ_A and point out where the channels differ. In the first step,the channel performs measurements M_{I} and M_{II}. M_{I} is a joint measurement on inputs X_1, X_2 and M_{II} is a joint measurement on inputs X_3, X_4. In the channel Γ_A, measurements M_{I} and M_{II} are performed in the basis $\{|\Psi_{\alpha,\beta}\rangle\}$ while in the channel Γ_B in the basis $\{|\Psi^*_{\alpha,\beta}\rangle\}$. The result of the measurement M_{I} (M_{II}) is denoted by m_{I} (m_{II}). m_{I} and m_{II} provide the $2d$-bit inputs to the randomness extractor f_{opt}, which produces a one-bit output. Existence of the extractor f_{opt} with proper features

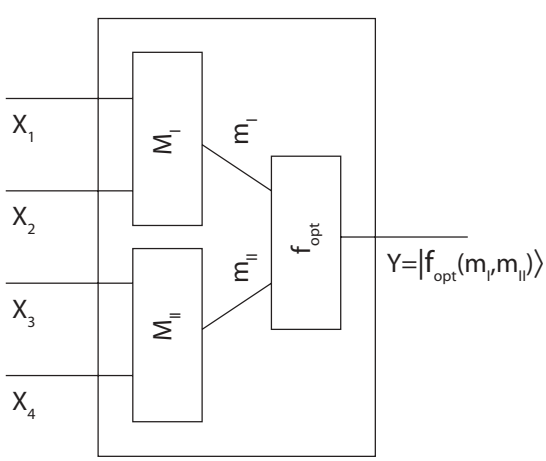

FIG. 1. The general schema of the channels Γ_A and Γ_B. X_i are d-qubit input lines. M_{I} and M_{II} are measurements. Its result is denoted by m_{I} and m_{II}, respectively. f_{opt} is a classical randomness extractor with properties described by Theorem 1.

will be proven later. Depending on the value of $f_{\text{opt}}(m_{\text{I}}, m_{\text{II}})$, the channel produces the output state $|0\rangle$ or $|1\rangle$.

We will show that for any $\delta > 0$, $H_{\min}(\Gamma_A^{(\delta)})$ and $H_{\min}(\Gamma_B^{(\delta)})$ cannot be lower than $1-\delta$. On the other hand, we will show that if each sender transmits $|\Psi_{0,0}\rangle$, the output entropy of the $\Gamma_A^{(\delta)} \otimes \Gamma_B^{(\delta)}$ is equal to 1. Since this is the upper bound for $H_{\min}(\Gamma_A^{(\delta)} \otimes \Gamma_B^{(\delta)})$ we will prove that for $\delta < 1/2$, $H_{\min}(\Gamma_A^{(\delta)}) + H_{\min}(\Gamma_B^{(\delta)}) > H_{\min}(\Gamma_A^{(\delta)} \otimes \Gamma_B^{(\delta)})$.

We start by proving that $H_{\min}(\Gamma_A^{(\delta)}) = H_{\min}(\Gamma_B^{(\delta)}) \geqslant 1-\delta$, but first we give a proposition which will be useful in what follows.

Proposition 2. For the random variables associated with the outputs of the measurements performed by the channels $\Gamma_A^{(\delta)}$ and $\Gamma_B^{(\delta)}$, the following holds: $H^\infty(M_I^A) = H^\infty(M_{II}^A) = H^\infty(M_I^B) = H^\infty(M_{II}^B) = d$. Here d denotes the input size of the channels.

Proof: We will only prove that $H^\infty(M_I^A) = d$ since the other cases can be proved analogously. Let the projector measurement M_{I}^A be performed on the product state $|\mu\rangle \otimes |\nu\rangle$, where $|\mu\rangle = \sum_{j=0}^{D-1} \mu_j |j\rangle$, $|\nu\rangle = \sum_{k=0}^{D-1} \nu_k |k\rangle$ are d-qubit states pertaining to senders S_1 and S_2, respectively. We will show that the probability $p(\alpha,\beta) = |\langle\psi_{\alpha,\beta}|\mu\rangle|\nu\rangle|^2$ of getting the pair (α,β) as the result of the measurement M_{I}^A satisfies $p(\alpha,\beta) \leqslant \frac{1}{D}$. $H^\infty(M_I^A) \geqslant d$ is a simple consequence of this fact.

Observe that

$$p(\alpha,\beta) = |\langle\psi_{\alpha,\beta}|\mu\rangle|\nu\rangle|^2 \tag{12}$$

$$= \frac{1}{D}\left|\sum_{l=0}^{D-1} \exp\left(\frac{2\pi i}{D}\alpha l\right)\langle l|\langle l+\beta| \times \sum_{j=0}^{D-1}\mu_j|j\rangle \sum_{k=0}^{D-1}\nu_k|k\rangle\right|^2 \tag{13}$$

$$= \frac{1}{D}\left|\sum_{j=0,k=0,l=0}^{D-1} \exp\left(\frac{2\pi i}{D}\alpha l\right)\right. \tag{14}$$

$$\times\, \mu_j\nu_k\langle l|j\rangle\langle l+\beta|k\rangle|^2 \tag{15}$$

$$= \frac{1}{D}\left|\sum_{l=0}^{D-1} \exp\left(\frac{2\pi i}{D}\alpha l\right)\mu_l\nu_{l+\beta}\right|^2 \tag{16}$$

$$= \frac{1}{D}\left|\langle\mu^*|U_\beta^\alpha|\nu\rangle\right|^2, \tag{17}$$

where $U_\beta^\alpha = \sum_{l=0}^{D-1} |l+\beta\rangle\langle l| \exp(\frac{2\pi i}{D}\alpha l)$ is a unitary. Finally, by the property of the scalar product we have $p(\alpha,\beta) = \frac{1}{D}|\langle\mu^*|U_\beta^\alpha|\nu\rangle|^2 \leqslant 1$. ∎

Taking into account Proposition 2, and noting that $d/2 > \log d$ is true for $d > 4$, we find that $d = \lceil 2\log 1/\delta + 12\rceil$ fulfills the requirements of Theorem 1 with $\epsilon = \sqrt{\delta}/2$. Since f_{opt} exists and has statistical distance ϵ, by Proposition 1 for each channel we have $H_{\min} \geqslant 1-\epsilon$.

Now consider the output entropy of $\Gamma_A^{(\delta)} \otimes \Gamma_B^{(\delta)}$ if all senders transmit $|\psi_{0,0}\rangle$. The first part of the $2d$-qubit state is transmitted through channel $\Gamma_A^{(\delta)}$ and the second through $\Gamma_B^{(\delta)}$ (see Fig. 2). We will show that in this case the output entropy of $\Gamma_A^{(\delta)} \otimes \Gamma_B^{(\delta)}$ cannot exceed 1.

MOST WIEDZY Downloaded from mostwiedzy.pl

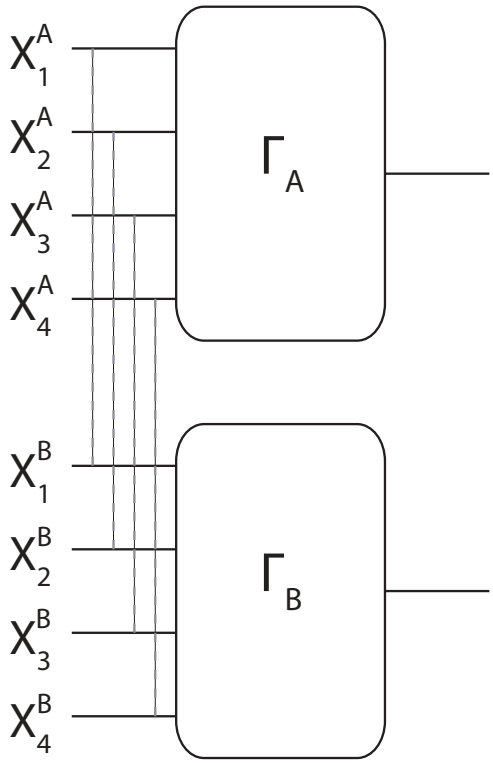

FIG. 2. The parallel setup of the channels Γ_A and Γ_B. Dashed lines depict entanglement of the inputs in the case of $|\Psi_{0,0}\rangle$ transmission through $\Gamma_A \otimes \Gamma_B$.

The randomness extractor f_{opt} is a deterministic function of the outcome of the measurements $M_{\text{I}}, M_{\text{II}}$. Its output controls which of the pure states $|0\rangle, |1\rangle$ will be the output of the channel. If the results of measurements M_{I}^A and M_{I}^B (M_{I}^A and M_{I}^B) are identical, then the outputs of the channels will be too. Let us focus on the measurements M_{I}^A and M_{I}^B. We will show that $p(m_{\text{I}}^A, m_{\text{I}}^B) = p(\alpha_A, \beta_A, \alpha_B, \beta_B) \propto \delta_{\alpha_A,\alpha_B}\delta_{\beta_A,\beta_B}$.

$$p(\alpha_A, \beta_A, \alpha_B, \beta_B) \tag{18}$$

$$= \frac{1}{D^2}\left|\langle\psi_{0,0}^*|U_{\beta_A}^{\alpha_A} \otimes U_{\beta_B}^{\alpha_B\dagger}|\psi_{0,0}\rangle\right|^2 \tag{19}$$

$$= \frac{1}{D^2}\left|\frac{1}{D}\sum_{k,l=0}^{D-1}\langle k|\langle k|\exp\left[i\frac{2\pi}{D}(\alpha_A - \alpha_B)l\right]\right. \tag{20}$$

$$\times |l+\beta_A\rangle|l+\beta_B\rangle|^2 \tag{21}$$

$$= \frac{1}{D^4}\left|\sum_{l}^{D-1}\exp\left[i\frac{2\pi}{D}(\alpha_A - \alpha_B)l\right]\delta_{\beta_A,\beta_B}\right|^2 \tag{22}$$

$$= \frac{1}{D^2}\delta_{\alpha_A,\alpha_B}\delta_{\beta_A,\beta_B}, \tag{23}$$

where Eq. (19) is obtained in the same way as Eq. (17). This result can be viewed as generalized entanglement swapping [20,24,25]. Entanglement between uses of channels Γ_A and Γ_B is swapped by the measurement M_{I}^A into entanglement between the inputs of channel Γ_B belonging to senders S_1 and S_2. The argument presented is also valid for measurements M_{II}^A and M_{II}^B.

As we have shown, in the case of entangled state transmission, the outputs of f_{ext} for channels Γ_A and Γ_B are equal. The output of channel $\Gamma_A \otimes \Gamma_B$ can be written in the form $p|00\rangle\langle 00| + (1-p)|11\rangle\langle 11|$ for which the entropy is upper bounded by 1.

We finish this part with some comments on the complexity of channels Γ_A and Γ_B in a scenario where entanglement swapping is used to break additivity of $H_{\min}$. Let us recall how the type of input states influence the characteristics of random variables associated with the outcomes of the joint measurements in entanglement swapping schema. We will denote these variables by M^A, M^B. Bell states transmission makes perfect correlations of M^A and M^B. H^∞ in this case reaches the highest value possible for the variables with a given size. On the other hand, in the case of product states transmission, random variables are independent and H^∞ is lower. Now all we want to do to get the subadditivity of $H_{\min}$ is to transform M^A and M^B into variables M_T^A, M_T^B with smaller sizes. The transformation should preserve as much randomness as possible and it should not destroy the correlations between M_A and M_B, hence it should be deterministic. This is the place where randomness extractors come in. However, there is no possibility to extract randomness from the single random source deterministically [23]. This is the main reason for four senders participating in the communication process.

III. SUPERACTIVATION OF $\mathcal{R}$

We now turn to the superactivation of the classical capacity regions of the channels $\tilde{\Gamma}_A, \tilde{\Gamma}_B$. Namely, we will show that if the senders can transmit only product states, classical capacity region $\mathcal{R}_{\text{prod}} = \mathcal{R}^{(1)}(\tilde{\Gamma}_A^{(\delta)}) + \mathcal{R}^{(1)}(\tilde{\Gamma}_B^{(\delta)})$ is bounded by the inequalities $R_S = \sum_{i\in S} R_i \leqslant 2\delta$ for any subset of senders S. We compare this with a protocol using entangled states. In this case achievable classical capacity region $\mathcal{R}_{\text{ent}} = \mathcal{R}^{(1)}(\tilde{\Gamma}_A^{(\delta)} \otimes \tilde{\Gamma}_B^{(\delta)})$ consists of all rate vectors (R_1, R_2, R_3, R_4) whose ingredients satisfy $R_1 + R_2 + R_3 + R_4 \leqslant 1$ and $R_i \geqslant 0$.

Let us present the channel $\tilde{\Gamma}_A$ (see Fig. 3). It is a 4-to-1 channel. The input of each sender consists of a d-qubits line and a one-bit line. The channel acts as

$$\tilde{\Gamma}_A^{(\delta)}(\rho_1 \otimes e_1^{(i)} \otimes \cdots \otimes \rho_4 \otimes e_4^{(l)}) \tag{24}$$
$$= \text{CNOT}_i \circ \cdots \circ \text{CNOT}_l\left[\Gamma_A^{(\delta)}(\rho_1 \otimes \cdots \otimes \rho_4)\right],$$

where ρ is transmitted through qubit inputs and $e^{(\cdot)}$ through bit inputs. $\text{CNOT}_0(\rho) = \rho$ and $\text{CNOT}_1(\rho) = X\rho X^\dagger$. CNOT denotes the controlled-NOT gote. In the same way, we construct $\tilde{\Gamma}_B^{(\delta)}$.

Note that $R_S \leqslant I(X_S : Y|X_{S^C}) \leqslant H_{\max} - H_{\min}$, where $H_{\max}$ is the maximal entropy of an output of a channel. By the

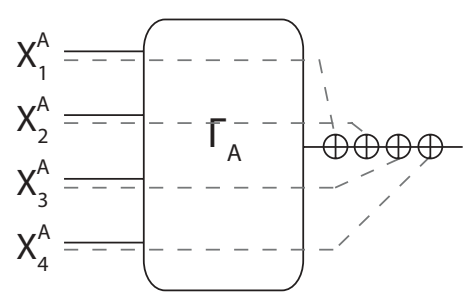

FIG. 3. Construction of the channel $\tilde{\Gamma}$. The solid lines represent the qubit lines and the dashed lines represent the bit lines. The bit lines control CNOTs performed on the output of the channel.

MOST WIEDZY Downloaded from mostwiedzy.pl

dimensionality of the output of the channels $\tilde{\Gamma}_A^{(\delta)}$ and $\tilde{\Gamma}_B^{(\delta)}$, we have in both cases $H_{\max} \leqslant 1$. Taking into account results from the previous section, we have that $H_{\min} \geqslant 1-\delta$, which leads to $R_S(\tilde{\Gamma}_A^{(\delta)}) \leqslant \delta$, $R_S(\tilde{\Gamma}_B^{(\delta)}) \leqslant \delta$, and $R_S(\tilde{\Gamma}_A^{(\delta)}) + R_S(\tilde{\Gamma}_B^{(\delta)}) \leqslant 2\delta$.

Now consider the use of entangled states for communication. In this protocol each sender transmits the state $\Psi_{0,0}$ through the quantum lines, the label 0 through the classical lines of the channel $\tilde{\Gamma}_A$, and with equal probability labels 0 or 1 through the classical lines of the channel $\tilde{\Gamma}_B$. As noted above, the outputs of the channels $\Gamma_A^{(\delta)}$ and $\Gamma_A^{(\delta)}$ are identical. We Pperform the CNOT operation controlled by the output of $\tilde{\Gamma}_A$ on the output of $\tilde{\Gamma}_B$. The result of CNOT pertaining to the channel $\tilde{\Gamma}_B$ and the classical input lines of this channel can be viewed as the output and input of the well known in the classical information theory binary XOR channel. Its achievable classical capacity region has a form as described above ($\mathcal{R}_{\text{ent}}$) [26].

IV. CONCLUSIONS

We have shown that very strong subadditivity of the minimum output entropy $H_{\min}$ and superadditivity of the capacity region $\mathcal{R}^{(1)}$ occurs in the domain of entanglement breaking quantum multiple access channels. The effect is based on the fundamental properties of MAC, i.e., independence of the senders. It is interesting if the subadditivity of $H_{\min}$ due to the senders independency occurs also in more basic schema with two senders.

We have shown that the superadditivity effect for R_T occurs for single shot capacity regions $\mathcal{R}^{(1)}$ of two different channels. As it was shown in [5], the superadditivity of the regularized classical capacity regions $\mathcal{R}^{(\infty)}$ of two different MACs occurs in the realm of single user rates R_i, however, the superadditivity of the regularized classical capacity $\mathcal{C}^{(\infty)}$ of one-to-one channels and the superadditivity of R_T of $\mathcal{R}^{(\infty)}$ of MACs still remain open questions.

ACKNOWLEDGMENTS

The author thanks P. Horodecki and R. W. Chhajlany for discussions and valuable comments. This work was supported by Ministry of Science and Higher Education Grant No. NN202231937 and by the QESSENCE project.

[1] R. Horodecki, P. Horodecki, M. Horodecki, and K. Horodecki, Rev. Mod. Phys. **81**, 865 (2009).
[2] M. Nielsen and I. Chuang, *Quantum Computation and Quantum Information* (Cambridge University Press, England, 2000).
[3] T. M. Cover and J. A. Thomas, *Elements of Information Theory* (Wiley and Sons, New York, 1991).
[4] M. B. Hastings, Nature Physics **5**, 255 (2009).
[5] L. Czekaj and P. Horodecki, Phys. Rev. Lett. **102**, 110505 (2009).
[6] L. Czekaj, J. K. Korbicz, R. W. Chhajlany, and P. Horodecki, Phys. Rev. A **82**, 020302(R) (2010).
[7] A. Grudka and P. Horodecki, Phys. Rev. A **81**, 060305(R) (2010).
[8] G. Yard and J. Smith, Science **321**, 1812 (2008).
[9] B. J. Yen and J. H. Shapiro, Phys. Rev. A **72**, 062312 (2005). M. B. Hastings, Nature Physics **5**, 255 (2009).
[10] X.-B. Wang, T. Hiroshima, A. Tomita, and M. Hayashi, Phys. Rep. **448**, 1 (2007).
[11] M. Horodecki, P. W. Shor, and M. B. Ruskai, Rev. Math. Phys **15**, 629 (2003); G. Yard and J. Smith, Science **321**, 1812 (2008); B. J. Yen and J. H. Shapiro, Phys. Rev. A **72**, 062312 (2005).
[12] C. King and M. B. Ruskai, IEEE Trans. Inf. Theory **47**, 192 (2001).
[13] P. W. Shor, Commun. Math. Phys. **246**, 453 (2004).
[14] S. Guha, J. H. Shapiro, and B. I. Erkmen, Phys. Rev. A **76**, 032303 (2007).
[15] F. G. S. L. Brandao and M. Horodecki, Open Syst. Inf. Dyn. **17**, 31 (2010).
[16] A. S. Holevo, IEEE Trans. Inf. Theory **44**, 269 (1998); B. Schumacher and M. D. Westmoreland, Phys. Rev. A **56**, 131 (1997).
[17] C. H. Bennett, D. P. DiVincenzo, J. A. Smolin, and W. K. Wootters, Phys. Rev. A **54**, 3824 (1996); H. Barnum, M. A. Nielsen, and B. Schumacher, *ibid.* **57**, 4153 (1998); H. Barnum, E. Knill, and M. A. Nielsen, IEEE Trans. Inf. Theory **46**, 19 (2000).
[18] A. Winter, IEEE Trans. Inf. Theory **47**, 3059 (2001).
[19] A. E. Allahverdyan and D. B. Saakian, in *Quantum Computing and Quantum Communications*, Lecture Notes in Computer Science Vol. 1509 (Springer, Berlin, 1999), pp. 276–284.
[20] C. H. Bennett, G. Brassard, C. Crepeau, R. Jozsa, A. Peres, and W. K. Wootters, Phys. Rev. Lett. **70**, 1895 (1993).
[21] B. Chor, O. Goldreich, SIAM J. Comput. **17**, 230 (1988).
[22] D. Zuckerman, Proceedings of the 31st IEEE Symposium on Foundations of Computer Science, 1990(unpublished), pp. 534–543.
[23] B. Barak, G. Kindler, R. Shaltiel, B. Sudakov, and A. Wigderson, Proceedings of the 37th STOC. ACM, 2005 (unpublished).
[24] B. Yurke and D. Stoler, Phys. Rev. Lett. **68**, 1251 (1992).
[25] M. Zukowski, A. Zeilinger, M. A. Horne, and A. K. Ekert, Phys. Rev. Lett. **71**, 4287 (1993).
[26] Mikael Mattas and Patric R. J. Östergärd, IEEE Trans. Inf. Theory **51**, 9 (2005).

MOST WIEDZY Downloaded from mostwiedzy.pl