The development of an underwater telephone for digital communication purposes

Jan SCHMIDT

Gdansk University of Technology
Faculty of Electronics, Telecommunications and Informatics
Narutowicza 11/12, 80-233 Gdańsk, Poland
Jan.Schmidt@eti.pg.gda.pl

The underwater telephone HTL-10 has been designed to provide voice and data communication between helicopter and submarines using acoustic waves. It works in a half-duplex mode and uses analogue power-efficient modulation in the form of a single side-band, suppressed carrier, in a wide range of frequencies. It generates the transmitted signal, and processes the received signals. It is implemented with the use of digital signal processing techniques. Although it was designed several years ago, the flexible structure of the underwater telephone ensures a convenient platform for the implementation of various types of communication, as well as testing. This ability is due to the particular characteristics of the digital signal-processing module, which was designed by the author, both in hardware and software. The main elements of the module consist of the fixed-point signal processor, and the floating-point high performance digital signal processor. The article demonstrates the ability to adapt HTL-10 to implement digital communication in shallow waters, with a robust low data rate spread spectrum approach.

Keywords: Digital signal processor, Spread spectrum, DDC, DUC, STANAG 1074/1475

1. Introduction

The purpose of the underwater telephone is to perform voice and data communication using acoustic waves. Such communication is usually carried out between surface ships and submarines. It uses analogue power-efficient modulation in the form of a single side-band with suppressed carrier and wide bandwidth. It is capable of transmitting signals over distances of several kilometers. Although underwater telephones were developed before World War II, even today they are effective tools for communication with submarines [1].

The idea of the underwater telephone HTL-10 construction stemmed from the need to ensure communication between helicopter and submarines. The HTL-10 is integrated with the submersible unit of dipping sonar, and uses the same transducer. This HTL-10 was developed several years ago and it has been tested in a field laboratory on the lake Wdzydze. It performs generation of the transmitted signal, and an analysis of the received signals, with the use of digital signal processors (DSP), and direct digital synthesis (DDS). This approach ensures both reliability of equipment, and its compact size. HTL-10 is housed in a compact cassette with a height of 150 mm, a width of 380 mm, and a depth of 330 mm.

2. Structure of underwater telephone HTL-10

The block diagram of the underwater telephone HTL-10 is shown in figure 1. It consists of structurally independent blocks and modules. In addition to the functional elements, which realize communication features, it also contains the power supplies, LCD monitor, dedicated keyboard, and loudspeaker. The accessories include transducer, microphone, headphone, transmission/reception key, and telegraph key.

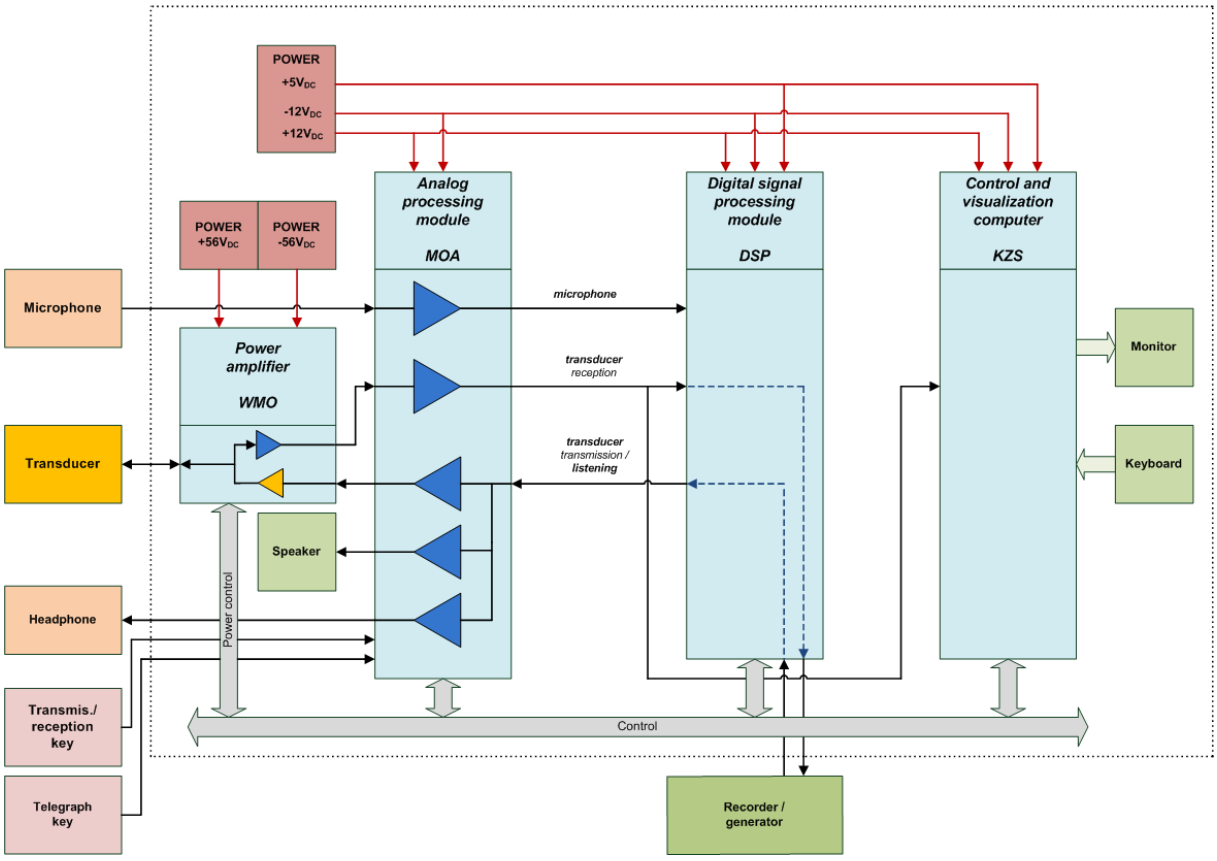

Fig. 1. The block diagram of the underwater telephone HTL-10.

Control and visualization computer (KZS) generates display, that allows to edit parameters, and to transfer their current values to other blocks and modules. It receives information about the status of their activities, as well as receiving the results of their actions. It is responsible for calculating the running spectrum of receiving signal. This is done using an analogue to digital converter, mounted on the computer module by the fast Fourier transform (FFT) algorithm. Analog processing module (MOA) aims at execution

MOST WIEDZY Downloaded from mostwiedzy.pl

the amplification and the bandwidth limitation for the received signal. It also realizes the coupling signals sources with other blocks and modules, depending on the currently selected mode. Power amplifier module (WMO) amplifies the prepared output signal for the selected power level. Digital signal processing module (DSP) is mainly responsible for the implementation of physical layer in the communication system, especially Single Side-Band (SSB) modulation and demodulation. The design of the module enables cooperation with the external device for recording and generating of signals, which is used for testing and research. Therefore, the further description and analysis refers to this module.

3. Digital signal processing module

3.1 Hardware solution

The block diagram of the digital signal-processing module is shown in figure 2. Its design ensures an optimal flow of signals, and high computational performance. It refers to both analogue and digital signals. This module is a key element for the achievement of the data transmission system in an open system. It uses the technology of a software defined communication system to work in the frequency band used in underwater communication systems. This convenience allows flexible implementation of different methods of communication in the target system, which is an underwater telephone, as well as a convenient platform for testing various system solutions. In particular, it is necessary to process the data in real-time.

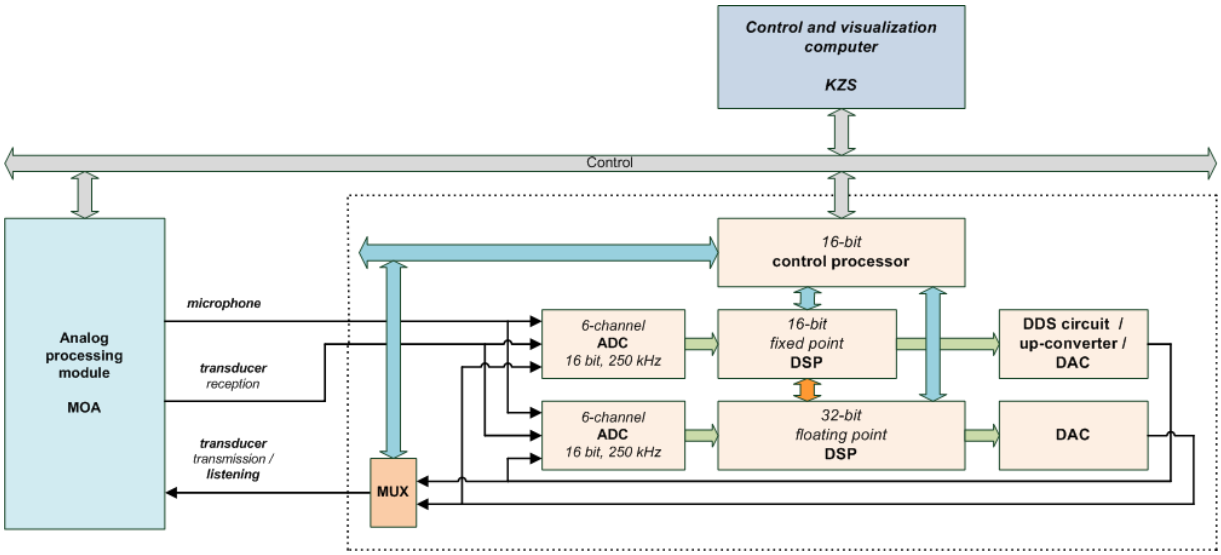

Fig. 2. The block diagram of the digital signal-processing module.

The module includes a control processor, which is responsible for managing the flow of all analogue signals, forcing the tasks of digital signal processing and communication with control and display computer. These tasks are carried out based on a 16-bit Texas Instruments microprocessor MSP430F149. Two computational paths are used to perform complex digital signal processing tasks. The first of them, contains a Texas Instruments 16-bit fixed-point digital signal processor TMS320VC5416, clocked at 160MHz. The processor's peak performance is 160 MIPS. The primary function of the module, is to perform modulation and demodulation of SSB signals with the support of Direct Digital Synthesis circuit, including the complex multiplier structure. The second of them, contains a Texas Instruments 32-bit floating-point digital signal processor TMS320C6713B. The second path usually performs

MOST WIEDZY Downloaded from mostwiedzy.pl

complex computational algorithms. The design of the main module, consisting mainly of the control processor and fixed-point digital signal processor, allows for easy replacement of the additional module containing a floating-point digital signal processor with higher computational performance. Each of the computational paths at the input has the independent multichannel analogue-to-digital converter with 16-bit resolution and maximum sampling frequency 250kHz. The source of the sampling frequency signal is the specifically intended for this task, direct digital synthesis circuit AD9834 from Analog Devices. It provides high stability of the generated signal. The output of each DSP path contains a 16-bit digital-to-analogue converter, but the module leaves the one analogue output signal. The path has the ability for sampling the analogue signal supplied from outside the module, as well as from the output of another computational path. Streams of digital signals can be transferred between computational paths with the large frequency bandwidth, with the aid of a first-in first-out (FIFO) memory, and synchronous serial interfaces SPI. Commands from the control and display computer are delivered to the control processor on the module, and provides to send them to each path, and to receive results of actions.

Design of the digital signal processing module was dictated to provide effective data rate, both for analogue and digital signals. It allows for real-time processing. It is necessary for this type of device, in which it is possible to carry out an interactive conversation. Acceptable delay talks may result only from delays caused by the propagation of acoustic waves in the water, not the complexity of the algorithms.

The presented module structure is flexible and convenient for the implementation of an acoustic underwater communication system. The module is independent, of the final modulation type. Thus, any type of modulation may be implemented both analogue and digital types. The system must work on an arbitrarily selected carrier frequency in the available operating frequency band, which is a priority because of the usability reason. This is dictated by the properties of the equipment used in the underwater environment, where the available frequency band is heavily exploited by different devices, even by medium and long range sonars. Most common modules of COTS type (commercial off-the-shelf) are usually dedicated to work in the radio frequency band. The used module works in an operating frequency band up to 45 kHz, with the possibility of adaptation up to 120 kHz. Therefore, it seems reasonable to assume that the hardware resources of the module are sufficient to carry out a number of different communication system requirements. Wherein the implementation efficiency of the underwater communication based on the SSB modulation, has been confirmed by numerous trials in inland waters, and during exploitation in the harsh marine environment. The essential complexity of construction is the mounting position of the device, in this case inside a helicopter.

The described structure of the digital signal-processing module has the ability to carry out transmitting and receiving processes based on the techniques presented below.

3.2 Transmission and reception side

On the transmission side, a digital complex baseband signal is translated to a digital real pass-band signal with the selected carrier frequency. Next, these signal samples are converted into an analogue signal. It is amplified in a power amplifier and is transmitted by the transducer. The digital up converter technique is used in translation process (DUC) [2], as is shown in figure 3.

MOST WIEDZY Downloaded from mostwiedzy.pl

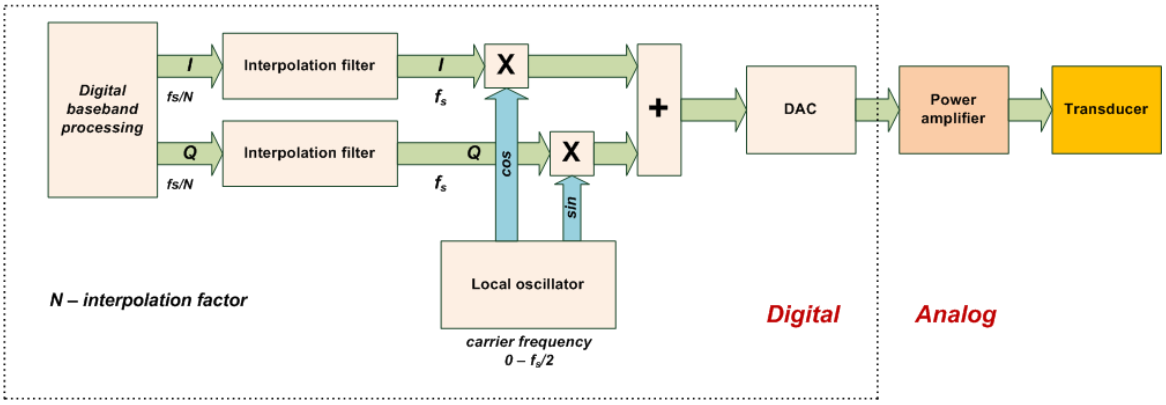

Fig. 3. The block diagram of the transmitter with digital up converter.

The quadrature modulation is performed by the multiplication of the in-phase (I) and quadrature (Q) signal with the corresponding digital values generated by a local oscillator in the form of a numerically controlled oscillator (NCO). The translating process to a pass-band signal with the carrier frequency, is done by tuning the local oscillator in the range from 0 Hz to nearly Nyquist frequency $f_N=f_s/2$. This tune value corresponds to the selected carrier frequency. The local oscillator operates at a sampling frequency f_s, while the input baseband samples come with a much lower rate. Therefore, interpolation filter is necessary to increase the sampling frequency of the baseband input signal by an interpolation factor N. The interpolation factor with respect to the sampling frequency f_s, specifies the desired input baseband signal bandwidth.

On the reception side, the analog-to-digital converter digitizes the analog signal, which was previously subjected to analog processing. Then, digital samples are fed to the digital receiver. The digital receiver uses a modern digital down converter (DDC) technique, also known as a digital drop receiver (DDR) [2], to translate a desired real pass-band signal centered with the carrier frequency down to complex base-band signal, centered around zero. It removes all other undesirable signals by low-pass filtering, and reduces the sampling rate. Wherein upper and lower sideband are preserved. Such a receiver utilizes digital signal processing in the translating process. The obtained signal is used for the baseband processor, which performs tasks such as demodulation, channel decoding and others.

As is shown in figure 4, receiver contains three basic blocks: digital mixer, local oscillator typically in form of numerically controlled oscillator (NCO), and decimating low-pass filter (LPF) implemented as a finite impulse response (FIR) filter and cascaded integrated comb (CIC) filter. By tuning of the local oscillator in the range from 0 Hz to nearly Nyquist frequency $f_N=f_s/2$ it is possible to translate an interesting real pass-band signal to a complex base-band signal. This requires a local oscillator, which in this case is implemented in software in order to obtain high accuracy. Local oscillator produces digital samples of two sinusoidal signals shifted between each other by 90 degrees in phase. Samples of local oscillator are prepared with the same sampling frequency f_s at which the analog signal is sampled. The decimation filter is designed to reduce the sampling rate with decimation factor N. Since the decimation factor is used less than 32, the digital receiver is wideband and a FIR low-pass filter is used to filter the bandwidth. This task is accomplished by the digital signal processor, also in the case of multichannel receiver realization. This technique allows the demodulation of signals on multiple frequency bands by software, and the only limitation is the available adequate computational performance. In the narrowband digital receivers, where decimation factors can be >32 (even 131072), are implemented CIC filter stages

MOST WIEDZY Downloaded from mostwiedzy.pl

without requiring multipliers. However, this receiver already requires the use of dedicated circuits: application-specific integrated circuit (ASIC) or field-programmable gate array (FPGA). The decimation factor and low-pass filter affect the base-band signal bandwidth.

This receiver has advantages - complex down-conversion does not introduce significant imbalance-related spectral terms, and the digital filters FIR type have linear phase characteristics. The overlapping images in the applied digital mixer are rejected, which is achieved by the accuracy of the sine and cosine local oscillator samples, and high precision of mixer.

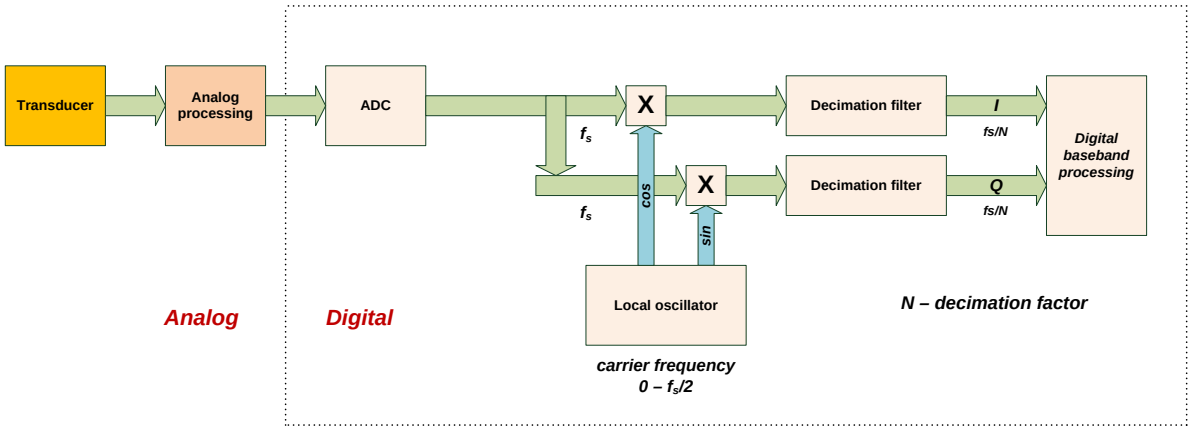

Fig. 4. The block diagram of receiver with digital down converter.

The above-described techniques, are characterized by advantages, which derive directly from the full implementation of digital technology.

The SSB modulator and demodulator were implemented with a digital signal processor and a direct digital synthesis circuit. The SSB modulator also utilizes external digital quadrature multiplier for preserving the stability of the process signal generation. This system has to work in real-time, in order to properly carry out entrusted tasks. The underwater telephone HTL-10 allows to work with the lower sideband with the carrier frequency range 4 to 43 kHz, and an upper sideband, and with the carrier frequency range 1 to 40 kHz. Step of adjustable frequency is equal to 50Hz. The fixed-point digital signal processor with direct digital synthesis circuit, including digital complex mixer, are used in the transmitting side. The fixed-point digital signal processor, and floating-point digital signal processor, are used in the transmitting side. Additionally, the digital floating-point signal processor uses algorithms for noise reduction in the received signal.

4. The concept of the implementation of the digital communication system

As in the case of the underwater analogue communication system, the underwater digital communication system should overcome a number of limitations when operated in shallow waters. The dominant factors are: spreading in time domain (multipath delay spread), and in frequency domain (Doppler spread), which occur strongly in water medium. As the result of the multipath propagation, which are characteristic for the horizontal channel, inter-symbol interferences occur, which is undesirable in communication systems. All the constraints cause complications in the receiver construction, whose function is to decode the symbol based on the received signal.

Implementation of the underwater digital communication system based on the existing underwater telephone, should provide the transmission of the message information with

MOST WIEDZY Downloaded from mostwiedzy.pl

moderate bit error rate at a level of 10^{-2} to 10^{-3}. Requirement for the transmission rate for this type of transmission system, is secondary. The physical layer of the transmission system has to provide an efficient and reliable acoustic communication link. The simplified block diagram of the considered digital communication system is shown in figure 5.

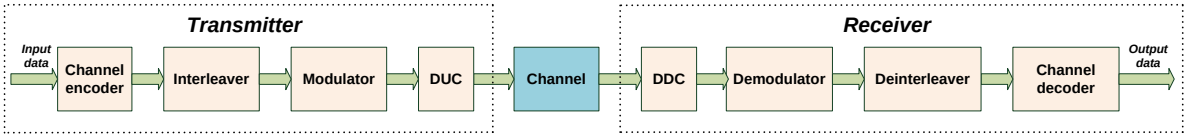

Fig. 5. Block diagram of the digital communication system.

As has been proven, the application of the channel coding and interleaving technique affects significantly on reduction of the error bit rate. The problem of random detect error is solved by the channel coding. Encoded bits, by using pseudorandom channel interleaving, can effectively exclude burst error. Additional transmission protection is a communication protocol, which uses Cyclic Redundancy Check (CRC) to detect a data error. The modulation process converts the information into a form which can be successfully transmitted over the medium. The considered digital communication system assumes the use of a flexible designed digital signal processing module. The key role is played especially by DUC and DDC techniques.

4.1 Synchronization

The structure of the transmitted signals includes preamble detection signals, which are followed by data signals, with gaps between them, as shown in the figure 6.

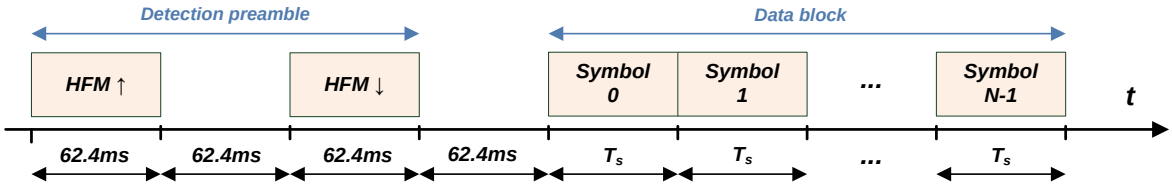

Fig. 6. The structure of the transmitted signals.

The signal of preamble detection, consists of two pulses of hyperbolic frequency modulation (HFM) signal [7][8]. HFM signal can be expressed as:

$$HFM(t) = exp\left[-j2\pi \frac{ln\left(kt+\frac{1}{f_1}\right)}{k}\right], \quad 0<t<T, \quad k = \frac{f_1-f_2}{f_1 f_2 T} \ . \tag{1}$$

The first pulse with increasing frequency ($f_1<f_2$), and the second with decreasing frequency ($f_1>f_2$), where f_1 denotes the start frequency, and f_2 the stop frequency of HFM waveform. HFM signals are used for frame detection and frame coarse synchronization purposes, and an estimation of the channel impulse response functions. Hence, the detection and synchronization process requires the use of two correlation receivers operating in parallel. In this case there are 512 coefficients of correlation per one receiver for f_s=8192Hz. Transmitted preamble detection signal is shown in the figure 7.

MOST WIEDZY Downloaded from mostwiedzy.pl

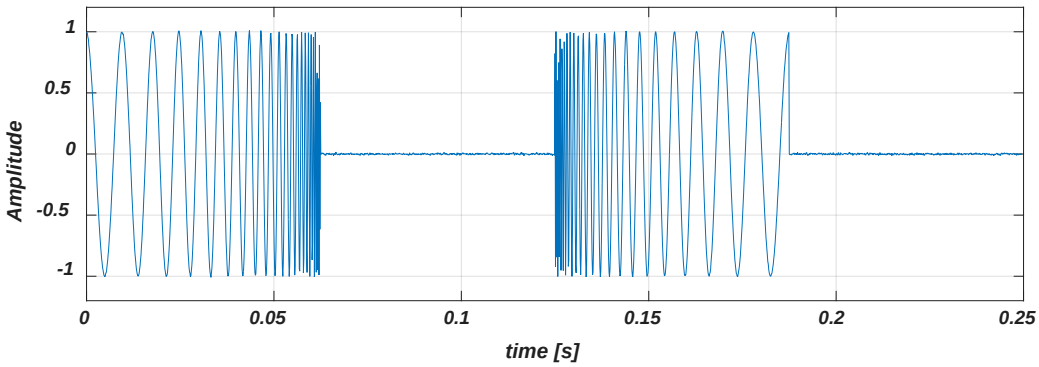

Fig. 7. Transmitted signal of preamble detection.

In contrast to the analog communication, digital communication requires the reception and current analysis in real-time only for a frame coarse synchronization signal. It is accepted, that the data signal can be recorded and analyzed with a delay. The requirements for carrying out operations in real-time in the case of implementation of digital communication systems are lower, than in the case of the implementation of analog communication systems based on digital technology.

4.2 Modulations

It assumed, that the digital communication system can work, using at the same time, a few selected methods of modulation. In the case of difficult communication channels, appropriate and prudent seems the use of non-coherent modulation techniques, because the coherent techniques still remain not as robust and reliable as desired. Parameters of selected modulation techniques are optimized for the worst-case multipath delay spread and Doppler spread.

The first implemented type of modulation technique is non-coherent Multiple Frequency Shift Keying modulation (MFSK), which allows to efficiently overcome undesirable effects of multipath spread, and Doppler spread. At the same time, it ensures the achievement of the transmission with relatively low bit error rate. This type of modulation technique is preferred for most commercial acoustic modems [3][4], and in the past has been extensively tested by the author. The MFSK modulation assigns the symbol to the specified frequency tone from the available set. The number of available frequency tones is defined as the modulation order $M = 2^k$, where the symbol is specified by group of k bits (k=2,3,4,…) and the duration of single symbol is equal to T_S.

Figure 8 shows the diagram of the considered system for the modulation technique 16 - FSK, and operation bandwidth 4096 Hz. To avoid the inter-symbol interferences, the guard time T_G should be inserted between successively transmitted symbols. The guard time has length at least equal to the maximum expected multipath spread. For duration of symbol signal 124.8 ms, the maximum transmission rate is 32 bps (without coding). To prevent the influence of the Doppler effect, frequency separation is used equal to Δf=256 Hz for the maximum permissible Doppler speed of ±4 m/s (~8knots), in the entire operating band. It also satisfies a condition of orthogonality. It would correspond to a maximum Doppler shift at the low frequency end of the available band (1kHz), of 2.6Hz, while a maximum Doppler shift at the top frequency end of the band (43kHz), would be 114.6Hz: hence, the frequency separation between each of them is equal to Δf=256 Hz.

MOST WIEDZY Downloaded from mostwiedzy.pl

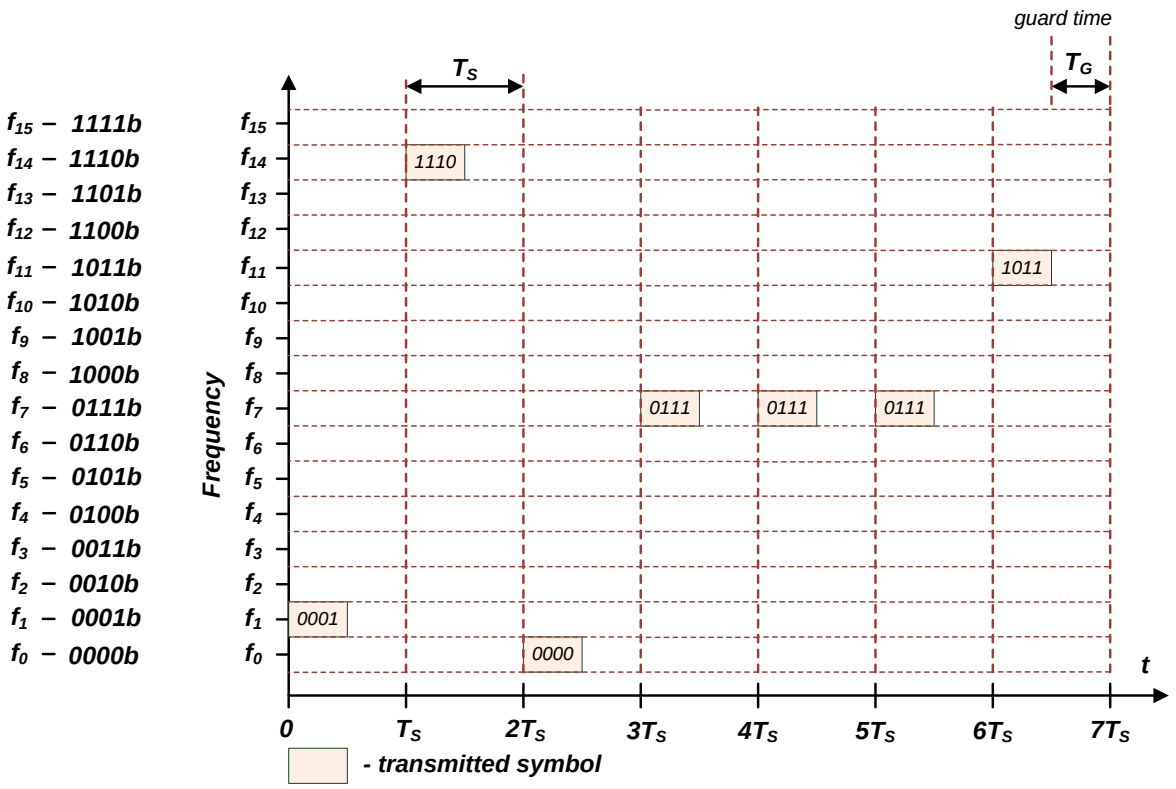

Fig. 8. The time-frequency graphical representation of transmitted symbol signals in the considered system with used modulation technique 16-FSK.

Complex base-band transmitted signal can be expressed as:

$$s(t) = \sqrt{\frac{2E_S}{T_S}} \exp\left[j2\pi f_i t + \varphi_i\right], \tag{2}$$

in time interval:

$$(n-1)\,T_S \le t \le nT_S - T_G, \quad 1 \le n \le N, \quad 1 \le i \le M\,, \tag{3}$$

where E_S is the average energy per symbol, T_S is the time duration of a single symbol, n is the number of transmitted symbol, N is the number of all symbols for transmission, f_i denotes the frequency of the i -th signaling tone and φ_i is the unknown random phase associated with the i -th signaling tone.

Second implemented type of modulation technique is frequency hopping, which belongs to the family of the spread spectrum technique. The spread spectrum techniques were originally developed for use in the military systems on account of their low probability of intercept (LPI) and resistance to jamming signals [2][5]. Additionally, it is possible to share just using the frequency band with many types of conventional modulations, with minimal or no interference. In this technique is usually employed BFSK or MFSK modulation with non-coherent demodulation, because with the use of coherent modulations it is difficult to keep phase coherence in the generated signal in the hopping pattern.

In this technique all the available channel bandwidth is divided into adjacent narrowband sub-channels. The carrier is switched between narrowband sub-channels by using a pseudorandom sequence, which is known to both the transmitter and the receiver. When the change of the carrier frequency is used many times (equal to L), during a particular

MOST WIEDZY Downloaded from mostwiedzy.pl

symbol duration T_S for MFSK (or bit duration T_b for BFSK), then we have to deal with fast frequency hopping system (FFH). T_H is the interval time when FH system spends at a particular frequency, between successive hops and $T_H=T_S/L$. Figure 9 shows the time-frequency graphical representation of transmitted bit signals in the considered system FFH-BFSK, which uses 7 hop per bit duration $T_b=7T_H$ and T_H=7.8ms. To combat multipath effect, the time and frequency diversity is used, with the diversity order L=7. This gives that channel clearing time is $T_{CC}=7T_H$=54.6ms. It is the time by which each of the narrowband sub-channels is unused, and the incoming multipath components are extinguished. This is true, as long as, the multipath delay spread is no longer than T_{CC}. It should be added, that frequency hopping techniques have no impact on performance system in an additive white Gaussian noise channel. An additional two frequencies are used for fine synchronization between transmitted spreading symbols. For total duration of symbol signal 54.6ms, with the duration of synchronization signal 7.8ms, the maximum transmission rate is about 16 bps (without coding). To prevent the influence of the Doppler effect, the counteraction is used, as for a previously presented modulation scheme.

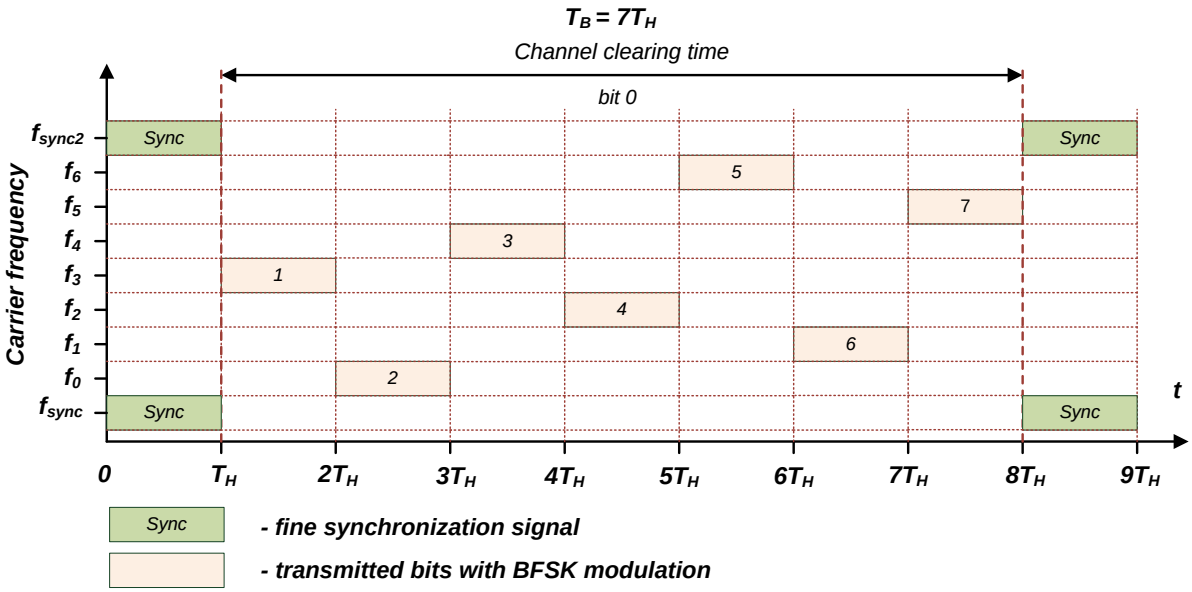

Fig. 9. The time-frequency graphical representation of transmitted symbol signals in the considered system with used modulation technique FFH-BFSK and $T_b=7T_H$.

Complex base-band transmitted signal FFH-BFSK can be expressed as:

$$s(t) = \sqrt{\frac{2E_b}{T_b}} \exp\left[j2\pi(f_l + b_n \frac{\Delta f}{2})t + \varphi_n\right], \tag{4}$$

in the time interval:

$$\left[(n-1) + \frac{l-1}{L}\right] T_b \le t \le \left[(n-1) + \frac{l}{L}\right] T_b, \quad 1 \le n \le N, \qquad 1 \le l \le L, \tag{5}$$

where E_b is the average energy per bit, T_b is the duration of a single bit, $b_n \in \{+1, -1\}$ is binary data for transmission, n is the number of transmitted bits, N is the number of all bits for transmission, l is the number of hop, f_l denotes the carrier frequency for the selected

MOST WIEDZY Downloaded from mostwiedzy.pl

frequency hopping band Δf is frequency separation between BFSK signals and φ_n is the unknown random phase associated with the transmitted bit.

Because the useful signal is transmitted in a specific moment of time in an only single narrowband channel, this enables the suppression of an interfering signal. Using FFH technique means that the interfering signal will coincide with the spectrum of the useful signal only to a small extent overall with its duration.

The frequency hopping technique is used in the first standard for digital underwater communication with the acronym JANUS, for military and civil purposes [6].

4.3 Implementation

On the transmission side, the transmitting base-band signal is generated in real-time through utilization of the available high performance of the digital signal processor. In this method, pass-band signal is obtained by utilizing a DUC technique. This is implemented using the digital signal processor and a digital to analogue converter, or direct digital synthesis/up-converter circuit.

Alternative method assumes the preparation of the pass-band signal samples and synchronous sending. This allows a large available dynamic memory, about the size of 128MB. For example, the digital to analogue converter operating at a sampling frequency of 192 kHz gives the maximum time of the output signal of approximate duration equal to 350 seconds. In practice, the required times are much shorter.

On the reception side, the key is to translate the pass-band signal to the base-band signal. This is accomplished by using DDC techniques. In DDC technique, numerically controlled oscillator implemented by floating-point DSP, which produces a current value of sine and cosine at the time of about 250 ns.

For both modulation schemes, the demodulation process is realized in the frequency domain with a suboptimal detector, which makes hard decisions within each time-frequency cell for the short time symbol interval T_S or bit interval T_b. The use of the discrete Fourier transform over the bandwidth of interest realizes channelized radiometer/channelized receiver, where discrete Fourier transform is computed by fast Fourier transform algorithm, due to its effective computation time. The spectrum of received signal is divided into frequency bins, where each of them contains one tonal signal, in time duration equal $T_S/16$ for 16-FSK (T_S=124.8 ms) and T_H for FFH-BFSK (T_b=54.6 ms). The decision logic performs assigning of values by comparison of which bin contains the greatest amount of energy at the current period analysis, based on information bins. In 16-FSK scheme, after thoroughly synchronizing the system with the received signal, it is possible to use averaging to improve the SNR. In FFH scheme, additional bins are used only for fine synchronization purposes. In demodulation of frequency-hopped signals, the process of dehopping is performed as analysis of calculated spectrum that covers the entire bandwidth of the system. Figure 10 shows the time-frequency graphical representation of received symbol signals in the detection process for transmitted 10101101 bits.

Texas Instruments digital signal processors provide for programmers an optimized library, DSPLIB, of digital signal processing routines. For example, for the type of 32-bit floating-point DSP (300MHz), the computation time of FFT algorithm in single-precision with number of complex points N=256 is only equal to 10 microseconds. Whereas, for the 16-bit fixed-point DSP (160MHz) computation time of FFT algorithm in fixed-point arithmetic with number of complex points N=256 it is equal to 54 microseconds.

It is important to ensure the possibility of a smooth change of the carrier frequency in transmission and reception side. As a result of the application of DDC technique, with

MOST WIEDZY Downloaded from mostwiedzy.pl

the same decimation factor for each of the selected carrier frequencies is obtained the same spectral resolution for spectral analysis using the FFT algorithm.

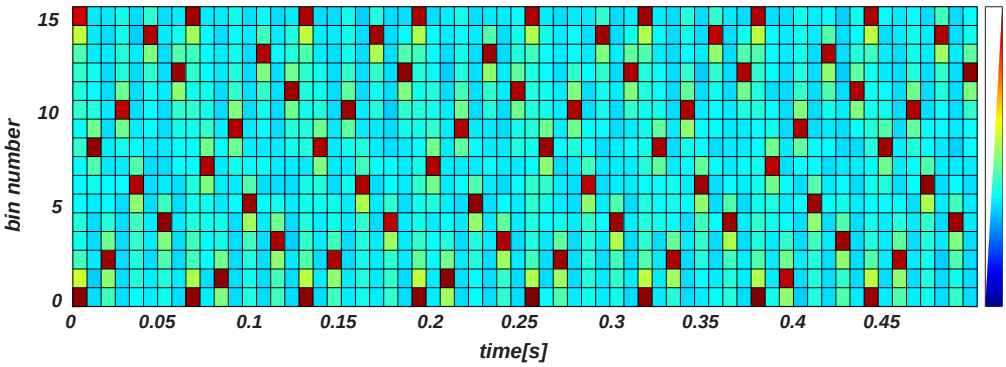

Fig. 10. The time-frequency graphical representation of received symbol signals in the detection process for transmitted 10101101 bits.

5. Conclusion

Underwater digital communication system has been a successfully implemented system on a previously used hardware platform of an underwater telephone based on digital signal processors, converters of analogue-to-digital and digital-to-analogue, after making appropriate changes to software. Digital signal processors may be the main computing power of the implemented system, and in particular in the implementation of the physical layer. An important element of the system is the use of DUC and DDC techniques.

Past and current research show that the selected modulation techniques, in combination with a suitable channel coding, and the interleave technique, can provide reliable and robust data transmission.

References

[1] Reichspatentamt, Patentschrift Nr 668943 Klasse 74d Gruppe 609, Wassertelefonieeinrichtung, Electroacustic G.m.b.H. in Kiel, 1935.
[2] R.A. Poisel, Electronic Warfare Receivers and Receiving Systems, Artech House, 2014.
[3] J. Schmidt, K. Zachariasz, R. Salamon, Underwater communication system for shallow water using modified MFSK modulation, Hydroacoustics, Vol. 8, 179-184, 2005.
[4] K. Zachariasz, J. Schmidt, R. Salamon, Code signals transmission using MFSK modulation in shallow waters, Hydroacoustics, Vol.4, 261-264, 2001.
[5] J. Schmidt, Reliable underwater communication system for shallow coastal waters, Hydroacoustics, Vol.17, 171-178, 2014.
[6] J. Potter, J. Alves, D. Green, G. Zappa, I. Nissen, K. McCoy , The JANUS underwater communications standard, Underwater Communications and Networking, 2014.
[7] J. Marszal, Experimental study of silent sonar, Archives of Acoustics, Vol. 39, No. 1, pp. 103–115, 2014.
[8] J.Yang, T.K. Sarkar, Doppler-invariant property of hyperbolic frequency modulated waveform, Microwave and optical technology letters, 48, 8, 1174– 1179, 2006.

MOST WIEDZY Downloaded from mostwiedzy.pl