Annals of Warsaw University of Life Sciences - SGGW
Forestry and Wood Technology № 92, 2015: 200-206
(Ann. WULS - SGGW, For. and Wood Technol. 92, 2015)

The selected effects of high temperature air-steam mixture wood drying

ALEKSANDRA KONOPKA, JACEK BARAŃSKI, MACIEJ WIERZBOWSKI
Department of Energy and Industrial Apparatus, Faculty of Mechanical Engineering, Gdansk University of Technology, Gdansk, Poland

Abstract: The results of properties change of beech wood after drying process are presented. The wood taken to experiments origins from northern part of Pomeranian region in Poland. Before the main high temperature drying process using air-steam mixture, wood was initially dried in an open air conditions. The high temperature drying process was conducted at the temperature 120ºC, humidity 48%, flow rate of drying medium 2.5m/s and atmospheric pressure. It allowed to reveal the effects of wood air-steam mixture and their temperature drying on wood properties. It has been recognized that air-steam mixture drying causes properties changes, such as deformation and stress of analysed wood species.

Keywords: wood drying, high temperature drying, wood properties

INTRODUCTION

High temperature drying of wood is defined as a method, where the temperature is equal or higher than 100ºC [1, 2]. Higher temperature than 100ºC is applied only when wood moisture content decreases below FSP (Fibre Saturation Point). Therefore drying fresh broadleaved wood is a risk. At moisture content about 40-60% occurrence of internal (collapse) and external cracks can be observed. Wood changes colour and then all of them can be noticed [10]. Drying intensification, which occurs at high temperature, affects the shortening drying time of the process in comparison with hot air drying [3, 4].

In the process of manufacturing timber, drying is the single most costly step in terms of energy consumption and time. High temperature drying process through a mixture of air and superheated steam is the way of drying, which reduces consumption of heat and electric energy. Decreasing energy consumption and processing time are two important current objectives of the timber drying industry. Extensive research has been done and is still undergoing to determine the optimal drying strategy to achieve the required timber quality at minimum cost. The variability of wood properties further complicates drying. Each specie has different properties, and even within specie, variability in drying rate and sensitivity to drying defects impose limitations on the development of standard drying procedures. The interaction of wood, water, heat and stress load during drying are complex. In practice local drying conditions in the experimental drying kiln strongly interact with the heat and mass transport in the wood.

The proper conduct of the drying process allows faster extraction of water [1]. Other benefits, possible to mention, are decrease in the equilibrium moisture content of wood or greater resistance to degradation [5, 6, 7, 8]. The disadvantages of this method are surface colouration, stress of dried material as a consequence of high temperature, drop in the mechanical properties [11], complicated dryer sealing and corrosive effects.

MATERIALS

The experiments of drying process were performed in the laboratory convectional drying kiln with 1.1 m^3 load capacity of samples. The superheated steam was produced by steam generator, which allowed keeping constant temperature and relative humidity inside drying kiln. Steam-air mixture circulation inside the experimental chamber was forced by fan. The speed of drying medium could be changed up to 2.5 m/s. The temperature inside drying chamber during experiments was 120°C.

The system, which controls drying process, is located outside the drying chamber. It contains 6 thermocouples to measure respectively temperature inside the kiln and temperature inside drying wood samples in 3 chosen locations (points in the sample, Fig. 1). This system also includes the psychrometer to measure the value of humidity of environment inside the drying chamber.

All parameters were monitored using the computer program DISPLEJ and then acquisitioned. Moisture content of dried wood was measured by gravimetric method. The experimental rig consists of a weight that allowed measurements of the mass sample during the drying process. The applied method of measuring the moisture content by gravimetric method enabled more accurate results for the method commonly used in the industry, which uses the moisture content sensors based on resistance.

Material used in the experiment was beech wood (*Fagus silvatic*a L.) originating from the northern part of Pomerania region in Poland. Samples from a wood beam length of 4.5 m were cut with 25 mm x 70 mm x 600 mm dimensions, Fig. 1.

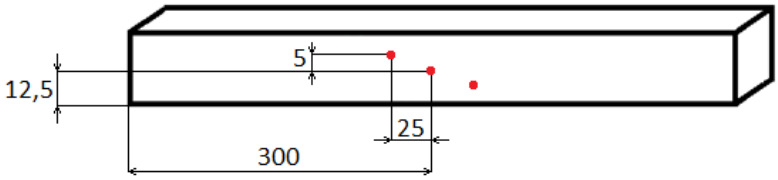

Figure 1. The view of sample prepared for drying with 3 measuring points.

Before the experiments all dimensions - high, width and length of samples were measured. Before the start of the drying process, in order to determine its moisture content (by gravimetric method), clippings were taken from wood samples before drying. The moisture content of wet wood in each piece was measured. Fig. 2 shows the method of taking the piece from sample of testing wood.

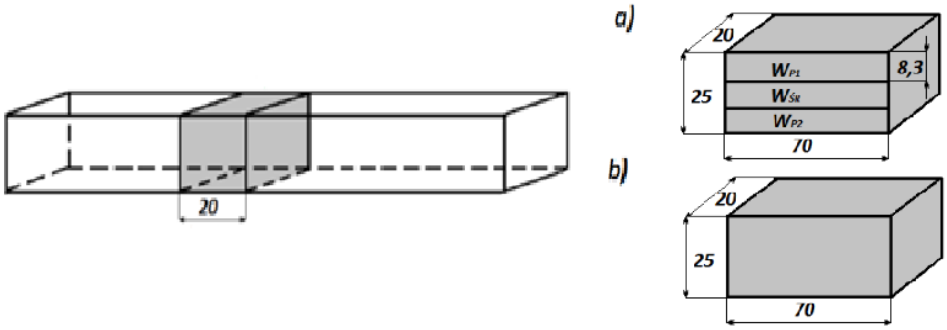

Figure 2. The view of moisture content measuring scheme in wood sample:
a) wet wood moisture content measurement in each piece,
b) wood moisture content measuring before drying by using the gravimetric method.

RESULTS

During the experiment, two samples of beech wood were dried. As a result of the research, graphs of temperature variability (Fig. 3) and moisture content changes of wood during the course of the research (Fig. 4) were prepared.

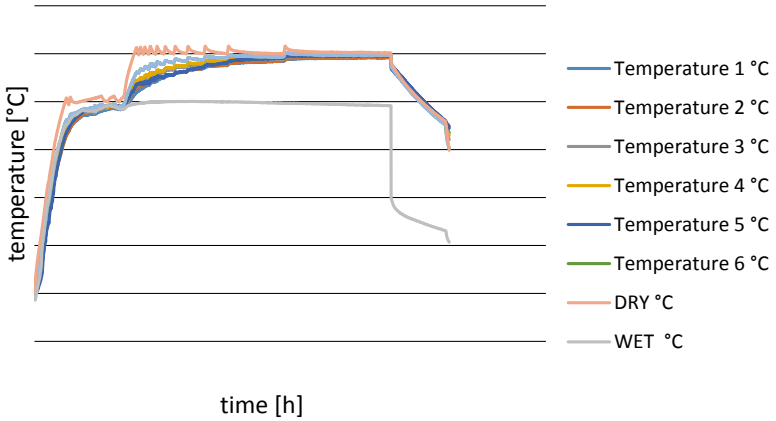

Figure 3. The changes of temperature in the drying chamber and in the wood during the drying process.

The drying process is divided into two parts - first is heating up to obtain temperature about 100ºC and second one main drying to remove moisture from wood at the temperature about 120ºC. We can see that heating up stage took about 1 h while second one took about 7 h, Fig. 3. Also, in picture below, we can see that during heating up phase moisture content increased to about 22% and then decreased to about 7% during main drying phase, Fig. 4.

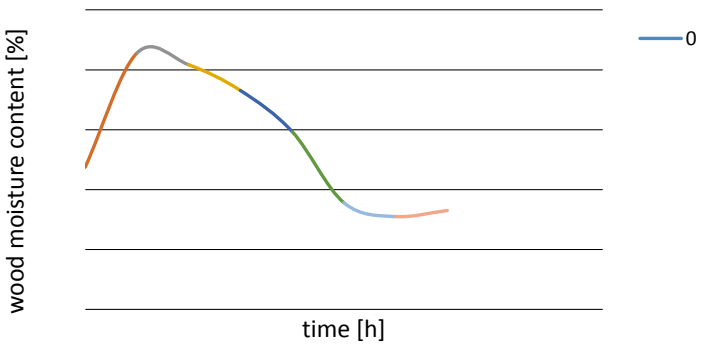

Figure 4. The changes of moisture content in wood during drying process.

The first step of analysing the quality of the wood after the drying process is based on a comparison of wood moisture content in each piece before and after drying (Fig. 5). Before drying process wood was initially dried in an open air conditions and after that was humidified. We can notice that wood moisture content before drying is about 14% while after drying is about 4%.

MOST WIEDZY Downloaded from mostwiedzy.pl

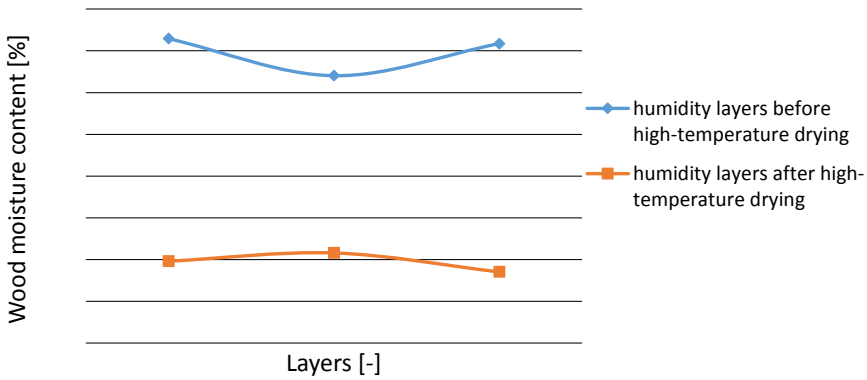

Figure 5. The changes of moisture content in piece of wood before and after drying.

To determine the level of stress occurring in the dried wood, so called "test of fork", the second step was performed (Fig. 6). The quality of wood after drying, using the equation (1), was analysed:

$$K = \frac{(h-s)\cdot 100}{h\cdot b} \cdot 100\ [\%], \tag{1}$$

where:
h - width of sample [mm],
b - high of sample [mm],
s - distance between forks [mm].

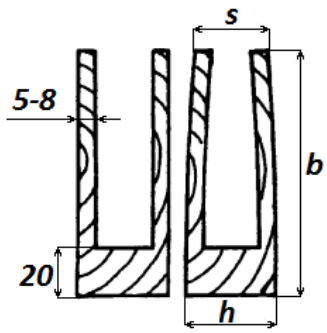

Figure 6. The view of simple, showing the samples of wood using to "test of fork" and the dimensions measured.

The obtained results after measuring main dimensions showed in Fig. 6 are presented in Table. 1.

Table 1. Results of quality wood in terms of stress.

"TEST OF FORK"					RATING
No. of sample	Width h [mm]	Height b [mm]	Distance between forks s [mm]	Wood quality index K [%]	
1	25.4	66.6	24.2	7.5	high quality
2	25.6	67	24.7	5.4	high quality

As we can see, the differences in distance between forks "s" in samples no 1 and no 2 are not so big, only 0.5 mm. According to equation (1), the test of dried wood shows high quality of dried material, which is determined by quality index "K".

As the next step, so called "rez-test", was performed. The aim of it was to determine the intensity of deformations occurring in the dried wood (Fig. 7). The results of the quality of the dried wood in terms of deformation are shown in Table 2.

Table 2. Results of quality wood in terms of deformations.

REZ - TEST		RATING
No of sample	Gap dimension s [mm]	
1	0.56	exclusive wood
2	0.33	exclusive wood

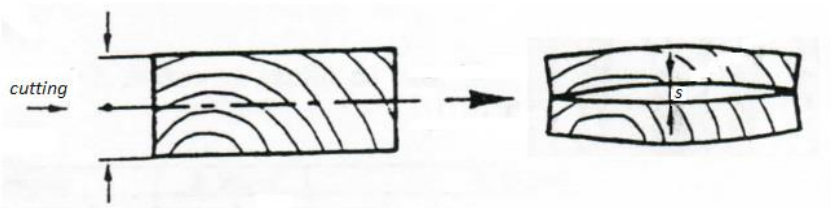

Fig. 7. The view showing samples of wood with dimensions 25.5 x 67 x 25mm, using to “rez-test”.

After this test we can assume that drying process didn't influence internal stress of wood. The value of gap dimension "s" is small but the differences between samples occur.

The last stage of the experiment was to determine optical properties (colour changes) of beech wood after drying in super-heated steam. These properties are expressed by the colour space coordinates of L*, a*, b*. Coordinate colour (CIE-Commission Internationale de l'Eclairage), as defined in ISO 7724, is based on the measuring the three parameters: brightness “L*” (100 for white to 0 for black colour), chromatic coordinate “a*” to determine the shade between red and green, and the chromaticity coordinate “b*” determining the hue between yellow and blue (Fig. 8).

On the basis of the three measured parameters (L*, a*, b*) using the colorimeter device Color Reader CR-10 of Konica-Minolta Company before and after drying the rate of colour change (ΔE), using the formula (2) was determined:

$$\Delta E = \sqrt{(\Delta L)^2 + (\Delta a)^2 + (\Delta b)^2}, \tag{2}$$

where:
ΔL^* - difference in lightness and darkness (+ = lighter, - = darker),
Δa^* - difference in red and green (+ = redder, - = greener),
Δb^* - difference in yellow and blue (+ = yellower, - = bluer).

MOST WIEDZY Downloaded from mostwiedzy.pl

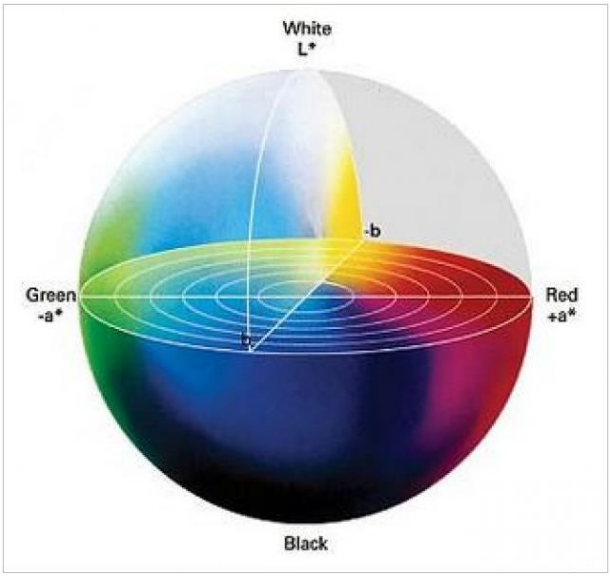

Figure 8. CIE Lab Colour Space.

The results of the colour change of wood after drying were presented in Tab. 3.

Table 3. Results of colour changes in terms of wood quality.

COLOR ANALYSIS					
no samples	ΔL*	Δa*	Δb*	ΔE	RATING
1	-7.9	0.1	-0.4	7.910752177	high colour change
2	-7.2	0.3	-2.4	7.595393341	high colour change

CONCLUSIONS

The "test of fork" and "rez-test" show that there were no big deformation and stress, which proves the well-chosen drying parameters and good quality of considered material. Moisture distribution in each piece of beech wood samples tested does not deviate from the norm. High temperature drying process has got great influence on colour changes of dried wood. It can be assumed that beech wood is not resistant on high temperature during drying process above 100ºC.

ACKNOWLEDGEMENT

The financial assistance of Technical University in Zvolen/Slovakia was under CEEPUS programme no CIII-SK-0310-07-1415. The authors from Poland want to kindly acknowledge I. Klement and T. Huráková for their help and assistance during experiments.

REFERENCES

1. Obataya E., Shibutani S., Hanata K., Doi S.: Effects of high temperature kiln drying on practical performance of japan cedar wood (Cryptomeria japonica) I: changes in hygroscopicity due to heating. Journal of Wood Science. 2006.
2. Perré P.: „How to Get a Relevant Material Model for Wood Drying Simulation?" COST ACTION E15 – Advances in drying of Wood, 1st Workgroup in Edinburgh. 13-14th Oct 1999.

3. Keylwerth, R.: „Hochtemperatur-Trockenanlagen". European Journal of Wood and Wood Products, 1952.
4. Gard W. F., Riepen M.: „Super-heated drying in Dutch operations". Conference COST E53, Delft, the Netherlands, 29-30 October 2008.
5. Langrish T. A. G., Kho, P. C. S., Keey R. B.: „Experimental measurements and numerical simulation of local mass-transfer coefficient in timber kilns". Drying Technology, 10, 753-781, 1992.
6. Langrish T. A. G., Keey R. B., Kho P. C. S., Walker J. C. F.: „Time-dependent flow in arrays of timber boards: Flow visualization, mass-transfer measurements and numerical simulation". Chemical Engineering Science, 48, 1993.
7. Pang S., Simpson I.G., Haslett A.N.: „Cooling and steam conditioning after high-temperature drying of Pinus radiate board: experimental investigation and mathematical modelling" Wood Science and Technology 35, 2001.
8. Sun Z. F., Carrington C. G., Bannister P.: „Dynamic modelling of the wood stack in a wood drying kiln". Chemical Engineering Research and Design, Transactions Institution of Chemical Engineers, Part A, 78, 2000.
9. Wierzbowski M., Barański J., Stąsiek J.: „Gas-steam mixture wood drying". COST E53 Meeting „Quality Control for Wood and Wood Products" : EDG Drying Seminar „Improvement of Wood Drying Quality by Conventional and Advanced Drying Techniques", Bled, Slovenia, April 21st-23rd, 2009.
10. Klement I., Detvaj J.: „Sawmilling and wood drying", Technical University in Zvolen, Faculty of wood sciences and technology, Department of mechanical technology of wood, 2013.
11. Barański J., Wierzbowski M., Konopka A.: „The change of mechanical properties of selected wood species after drying process under various conditions", Ann. WULS – SGGW, For. and wood Technol. 86, 2014.

Streszczenie: *Wpływ warunków suszenia drewna bukowego w wysokiej temperaturze z wykorzystaniem mieszaniny powietrzno-parowej na jego właściwości.*
W artykule przedstawiono analizę zmian właściwości drewna bukowego po przeprowadzeniu wysokotemperaturowego procesu suszenia. Suszonym drewnem było drewno bukowe pochodzące z północnej części Polski, region Pomorza. Główny proces suszenia w atmosferze powietrza i pary przegrzanej poprzedzony został suszeniem materiału na wolnym powietrzu. Suszenie przebiegało pod ciśnieniem atmosferycznym w temperaturze 120°C, wilgotności 48% i przy prędkości przepływu czynnika suszącego wynoszącej 2.5 m/s. Przeprowadzone testy jakości drewna po suszeniu umożliwiły przedstawienie wpływu wykorzystania mieszaniny powietrzno-parowej, jako czynnika suszącego na właściwości badanego drewna. Stwierdzono, że zastosowanie mieszaniny powietrza i pary przegrzanej o zadanych parametrach suszenia przyczyniło się do zmian właściwości drewna bukowego, takich jak deformacja, naprężenia w materiale oraz zmiana barwy

Corresponding author:

Jacek Barański,
Narutowicza 11/12,
80-233, Gdańsk, Poland
email: jbaransk@pg.gda.pl
phone:+48 58 347 14 07

MOST WIEDZY Downloaded from mostwiedzy.pl